YAMATO

Instruction manual

FULL AUTOMATIC EXTINGUISHING SYSTEM

ABLE

Automatic fire extinguishing system for industrial machines

Specifications • Installation • Inspection

Models

ACO-4B
ACO-7B
ACO-10B
ACO-15B
ACO-30B
ACO-60B
ACO-100B
ACO-15BZ
AFF-6B
ADC-20B

YAMATO PROTEC CORPORATION

Follow the precautions below for your safety

Before using the unit, read this instruction manual thoroughly to learn its proper operation.

- This instruction manual will explain how to operate this unit correctly. The precautions describe procedures that you must follow for safe operation of the unit. The safety precautions are given as ⚠**WARNING**s and ⚠**CAUTION**s. Make sure to follow the advice given in order to prevent or reduce the chance of personal injury or property damage.
- After reading this manual, be sure to store it in a safe place so that it can be referred to by others at anytime.

⚠ WARNING

Failure to follow the advice given may result in death or serious injury.

In case of fire, leave the area immediately.

- Burns or other accidents may occur due to burning objects falling or to extinguishing agents being dispersed.

⚠ WARNING

Failure to follow the advice given may result in death or serious injury.

In case of installing an exhaust air system, arrange the system in such a way that it may be stopped (duct closed or fan stopped) at the same time with startup of fire detection.

- Fire extinguishing may be prevented because of discharge of the fire extinguishing agent.

⚠ CAUTION

Failure to follow the advice given may result in personal injury or property damage.

⚠ Precautions when installing

- Do not install the unit any place where water, oil, or metal fillings might get inside.
- Avoid installing the unit any place that is subject to vibration or mechanical shock.
- Install the unit in a place with an ambient temperature range of 0°C to 40°C and non condensing.
- Do not change the control panel settings without permission.
- Install the unit carefully so as not to distort the cabinet.
- Be careful not to allow any foreign objects to get inside the pipe. Make sure to secure the mounting screws.
- To test detectors or individual remote alarming devices, follow the directions in this instruction manual.

(Pages 55 to 62)

⚠ CAUTION

Failure to follow the advice given may result in personal injury or property damage.

⚠ Precautions for installation and maintenance

- Make sure that the POWER indicator lamp is lit.
- Make sure that the pressure gauge pointer on the stored pressure container is in the green area. Check the pressure gauge pointer periodically. (AFF-6B)
- Make sure that the weight of the gas container (exc. ADC-20B) and the gas cylinder for pressurization (ADC-20B) is within the proper range. Check the weight of the gas periodically.
- Make sure that the copper pipe is not deformed and that the nozzle is installed in the proper position.
- Make sure there is no damage to the electric wire sheath.
- Make sure that the setting pin is installed on the starter shaft, and that the device is ready to start.
- Make sure that the lock pin keeper of the solenoid is ready to start. (ACO-60B, 100B)
- Be careful not to press the MANUAL START button except in case of a fire.
- Make sure that detectors are installed in the proper positions and that no foreign objects are blocking the detector.
- Be sure to change the gas generator, detector, and nozzle cover that have passed four years after installation as well as the fire extinguishing agent (foam extinguishing, dry chemical extinguishing) that has passed eight years.
- Have a fire extinguisher maintenance company make periodical checks. (Once per six months)

⚠ CAUTION

Failure to follow the advice given may result in personal injury or property damage.

⚠ Precautions after using the extinguisher

- After the extinguisher is discharged, wipe the agent off the surface of any objects it have come in contact with and dry them completely.
- Keep everyone away from the protected area while the extinguisher is discharging. If the target objects have covers, do not remove them until you are sure that the fire is out.
- After the extinguisher is discharged, turn off the control panel and perform the tasks connected with the remote alarming functions to check the device's safety.
- After operating the unit, clean the nozzle and the inside of the pipe thoroughly. If you are using a liquid agent, remove the nozzle, and clean out the agent if the nozzle is clogged.
- After using the unit, you will be required to replace the fire extinguishing agents, gas generator and nozzle, and then test the operation of the unit. Request your fire extinguisher maintenance company to service the unit.

⚠ OTHER

For details about proper installation and checks, read the instruction manual in to ensure maximum overall system performance.

Table of contents

Chapter 1 Specifications

1. Overview of ABLE 1
2. Device Configuration ..... 2 - 3
3. ABLE Specifications ..... 4 - 6
4. Device Appearance Diagram, Internal Design ..... 7 - 23
5. Operation Flow Chart ..... 24 - 25
6. Circuit Block Diagram ..... 26 - 27
7. Daily Operation <High performance type> ..... 28 - 30

Chapter 2 Installation

1. Installation Procedure 31
2. Accessories and Spare Parts 32
3. Installing the Cabinet 33
4. Installing Nozzles and Detectors ..... 34 - 35
5. Copper Pipe Arrangement ..... 36 - 37
6. Wiring ..... 38 - 49
7. Setting Control Panel Switches ..... 50 - 54
8. Testing and Setting ..... 55 - 61
9. Check Sheet 62

Chapter 3 Inspection

1. Pre-Inspection Procedure 63
2. Visual and Functional Inspection (conducted every six months) 64
3. Comprehensive Inspection (conducted every year) 65
4. Replacement Parts 66
5. Replacing the Gas Generator ..... 66 - 69
6. Replacing the Extinguishing Agent ..... 70 - 72
7. Cleaning the Copper Pipes 73
8. Replacing the Nozzle Cover 73
9. Care after Replacement and Use 73

Chapter 4 Design Standards

1. Method to Calculate the Amount of Carbon Dioxide Fire Extinguishing Agent 74
2. Method to Calculate the Amount of Dry Chemical Fire Extinguishing Agent 75
3. Method to Calculate the Amount of Foam Fire Extinguishing Agent 75
4. Attached Table: Coefficient of Gas Fire Extinguishing Agent by Type of Dangerous Substance 76

Chapter 5 Overview of Instruction Manual

1. Monitoring Status 77
2. Operation 78
3. Operating Conditions 79
4. Abnormal State 79
5. After the System is Operated 79
6. List of Appearance Diagrams 80

Chapter 6 Reference Material

1. Theoretical Concentration and Design Concentration of Carbon Dioxide 81
2. Concentration Calculation of Carbon Dioxide ..... 81 - 82
3. Fire Extinguishing Effect of Carbon Dioxide and Danger of its Discharge 82
4. Temperature Characteristics of the Thermistor Sensor 83
5. Q&A ..... 84 - 86

Specifications

1. Overview of ABLE ····· 1
2. Device Configuration ····· 2 - 3
3. ABLE Specifications ····· 4 - 6
4. Device Appearance Diagram, Internal Design ····· 7 - 23
5. Operation Flow Chart ····· 24 - 25
6. Circuit Block Diagram ····· 26 - 27
7. Daily Operation < High performance type > ····· 28 - 30

1. Overview of ABLE

Today, industrial devices have dramatically improved. Devices that are electronically controlled save labor and make advanced unmanned systems possible. To protect these modern industrial devices we have developed the ABLE series of small, automatic fire extinguishing systems, which all have advanced fire-extinguishing performance. ABLE comes in models that use a variety of extinguishing agents such as carbon dioxide, foam, and dry chemicals (ABC). The detectors are heat-sensitive semiconductor devices (thermistors) that can respond to heat from a fire quickly and is highly accurate. Also, thanks to its small design, you can easily install an ABLE device any place it is needed. The standard function detects a fire (using thermistor heat detectors) and discharges an agent automatically to extinguish the fire. It is also equipped with a control panel that has a variety of system control functions. The whole unit is stored in a small case.

1. Features of ABLE systems

- One thermistor heat detector is standard
- The temperature setting is highly accurate (the operating temperature can be set anywhere between 60°C and 120°C)
- Disconnection in the external and internal wiring and anomaly in the starting circuit can be detected.
- Equipped with a high-reliability starter using an electric starter
- Automatic or manual monitoring can be selected (high performance type)
- Switching to OR mode / AND mode (high performance type)
- Delay timer can be set to 0~99 seconds. (high performance type)
- Optionally, a standby power source can also be connected (high performance type)
- In addition, this system can expand its application to AUTO / MANUAL switching etc. by outside operation.

2. Device Configuration

The cabinet contains a container, control panel, and starter. You can specify all settings using the TEMP. ADJ. (temperature adjustment) knob on the control panel. The control panel comes with a MANUAL START button, several indicator lamps, and an alarm buzzer. Moreover, the high performance type can be equipped with an AUTO/MANUAL toggle switch, a mode select switch, a delay timer and a standby power supply connecting terminal to expand its configuration.

1. Overview of ABLE operation

<Various fire centers>

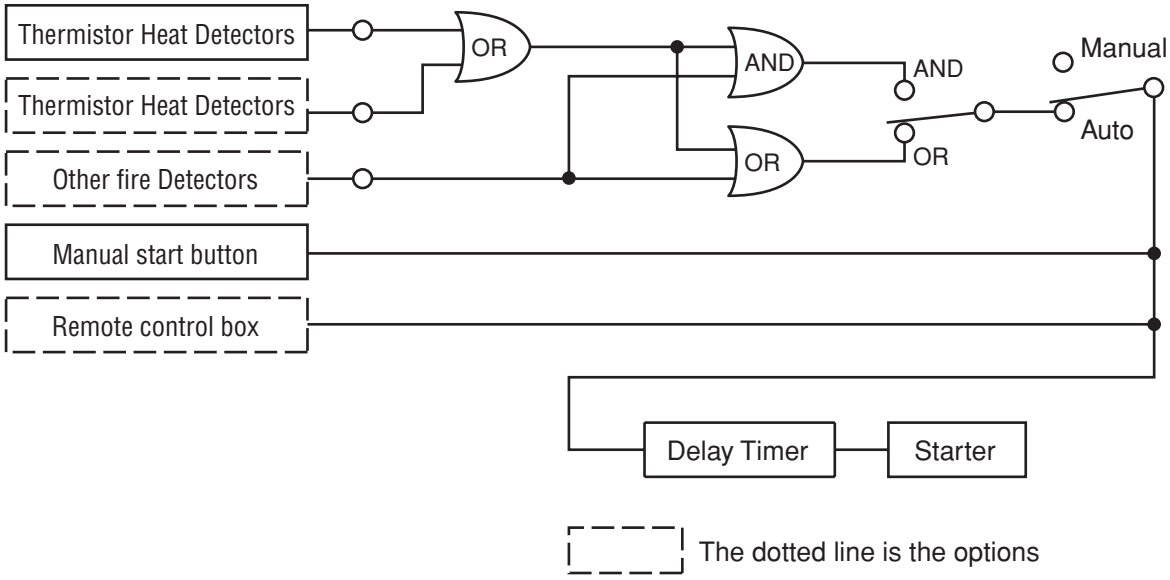

2. ABLE Models

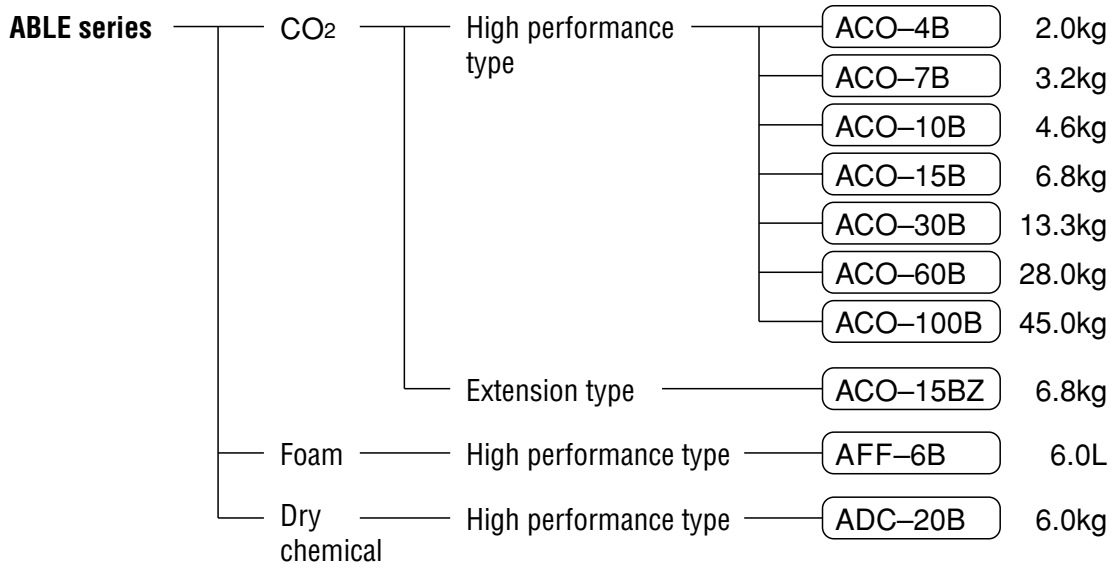

Carbon dioxide fire extinguishing agent can be added in combination with <expansion> BZ type.

• Selection of ABLE

Adaptive extinguishing agents and detectors depend on the targets to be installed. The model and agent capacity must be selected according to the size of the target and the type of combustible. The following table shows a list of basic adaptive models. The optimal design available upon request.

	ACO–**B	AFF–6B	ADC–20B
Small machine tool	○		
NC lathe	○		
Finishing lathe	○		
Machining center	○		
Grinder	○		
Dust catcher	○		
Automatic solder layer	○		
Various test machines	○		
Semiconductor production device	○		
Washer	○	○	
Printer	○	○	
Constant-temperature bath	○		○
Drier	○		○
Exhaust duct	○		○

3. ABLE Specifications

■ Automatic fire extinguishing device specifications <High performance type>

Item \ Models		ACO-4B	ACO-7B	ACO-10B	ACO-15B
Agent		CO_2 (carbon dioxide)			
Agent capacity		2.0kg	3.2kg	4.6kg	6.8kg
External dimensions of cabinet (H × W × D)		580 × 275 × 230 (mm)		800 × 290 × 250 (mm)	
Total weight		Approx. 16.8 kg	Approx. 19.5 kg	Approx. 26.0 kg	Approx. 32.5 kg
Starting method		Starting with the gas generator			
Nozzle		1/4C25 type (two nozzles supplied)			
Discharge time (seconds)		Approx. 8	Approx. 11	Approx. 17	Approx. 25
Connecting pipes		Copper pipe ø8 × ø6 × ø10 m			
Connecting pipe type		Phosphorus anti-oxidation seamless copper pipe (JIS H3300)			
Pipe connections		Self-sealing with entrenching rings			
Control panel	Type name	GCA-3HG			
	Input power supply	100 VAC/200 VAC ± 10 %, 50/60 Hz (Connector switching type) Factory setting: AC200V			
	Power consumption	max 26 VA			
	Output power supply capacity	24 VDC max 0.1A			
	Manual start button	Momentary, gold contact, red point			
	AUTO/MANUAL toggle switch	Toggle switch, gold contact AUTO is selected when delivered			
	Alarm buzzer	Electronic buzzer/ Loudness: 85 dB or more			
	POWER indicator lamp	AC power: Green lamp ON, Standby power: Red lamp ON, Anomalies: Blinking			
	Start lamp	Detection: Red Lamp Blinking, Start: Red Lamp ON			
	Auto lamp	Automatic monitoring: Green Lamp ON			
	Anomaly lamp	Anomalies: Yellow Lamp Blinking			
	In-board indicator lamp	Actuation lamp: 5 pcs, Anomaly lamp: 9 pcs.			
	Detector input circuit 1	2 circuits for thermistor heat detectors OR mode detectors (set to 120°C when delivered)			
	Detector input circuit 2	1 circuit (for signal converter or another detector)			
	TEMP. ADJ. (temperature adjustment) knob	Thermistor heat detector, operating temperature: anywhere between 60°C and 120°C			
	Starting output	Connector connected (only for one gas generator)			
	Remote AUTO / MANUAL switching output	Switching to manual operation can be remotely done (possible only when the changeover switch of the control panel is in AUTO).			
	Interlocking output	Five sets of interlocking equipment (MC-K) can be connected.			
	Detection signal transfer	DC30V 1A (a contact, b contact switching)			
	Start signal transfer	DC30V 2.5A (a contact, b contact switching)			
	Detection / start / discharge signal transfer	DC30V 1A (a contact, b contact switching)			
		Start signal transfer or detection signal transfer switching type			
	Anomaly signal transfer	DC30V 1A (a contact, b contact switching)			
		Power supply OFF or blackout (disconnection switching)			
	Ambient temperature range	0°C~40°C (no condensation)			
	Delay timer circuit	0 to 99 seconds: optional setting			
	Mode setting circuit	Enabled by AND / OR changeover switch			
	Standby power source	With connector for standby power source			
Thermistor heat detector		DTA-2 One (heat resistance: 0°C~250°C)			
Optional	Thermistor heat detector	DTA-2 One (heat resistance: 0°C~250°C)			
	Signal converter	TTA-2 actuation temperature can be set to 60°C~120°C. DC24V 12mA			
	Remote control box	RC-3			
	Interlocking equipment	Gas generator unit (MC-K)			
	Fire detector	Fixed temperature spot type, smoke, flame detectors			
	Equipment stop signal transfer	Enabled by relay			
	Standby power source	NiCd battery (24 VDC/0.45 AH)			

■ Automatic fire extinguishing device specifications <High performance type>

Item \ Models		ACO-30B	ACO-60B	ACO-100B	ACO-15BZ
Agent		CO_2 (carbon dioxide)			
Agent capacity		13.3kg	28.0kg	45kg	6.8kg
External dimensions of cabinet (H × W × D)		1030 × 320 × 280 (mm)	2100 × 400 × 450 (mm)		800 × 250 × 250 (mm)
Total weight		Approx. 53.0 kg	Approx. 175.0 kg	Approx. 215.0 kg	Approx. 30.0 kg
Starting method		Starting with the gas generator	Starting with the solenoid		Starting with the gas generator
Nozzle		1/4C25 type (two nozzles supplied)	(Gas injection head)		1/4C25 type (two nozzles supplied)
Discharge time (seconds)		Approx. 48	——		Approx. 25
Connecting pipes		Copper pipe ø8 × ø6 × ø10m	Steam pope 25A		
Connecting pipe type		Phosphorus anti-oxidation seamless copper pipe (JIS H3300)	JISG3454 sch80		Phosphorus anti-oxidation seamless copper pipe (JIS H3300)
Pipe connections		Self-sealing with entrenching rings	Thread connection		Self-sealing with entrenching rings
Control panel	Type name	GCA-3HG			Interlocking equipment (MC-K)
	Input power supply	100 VAC/200 VAC ± 10 %, 50/60 Hz (Connector switching type) Factory setting: AC200V			Supplied from the control board
	Power consumption	max 26 VA			——
	Output power supply capacity	24 VDC max 0.1A			——
	Manual start button	Momentary, gold contact, red point			——
	AUTO/MANUAL toggle switch	Toggle switch, gold contact AUTO is selected when delivered			——
	Alarm buzzer	Electronic buzzer/ Loudness: 85 dB or more			——
	POWER indicator lamp	AC power: Green lamp ON, Standby power: Red lamp ON, Anomalies: Red Lamp Blinking			——
	Start lamp	Detection: Red Lamp Blinking, Start: Red Lamp ON			——
	In-board indicator lamp	Actuation lamp: 5 pcs, Anomaly lamp: 9 pcs.			Power indicator lamp, Start lamp, Anomaly lamp
	Detector input circuit 1	2 circuits for thermistor heat detectors OR mode detectors (set to 120°C when delivered)			——
	Detector input circuit 2	1 circuit (for signal converter or another detector)			——
	TEMP. ADJ. (temperature adjustment) knob	Thermistor heat detector, operating temperature: anywhere between 60°C and 120°C			——
	Starting output	Connector connected (only for one gas generator)	Terminal connected (only for one releasing device)		Connector connected (only for one gas generator)
	Remote AUTO / MANUAL switching output	Switching to manual operation can be remotely done (possible only when the changeover switch of the control panel is in AUTO).			——
	Interlocking output	Five sets of interlocking equipment (MC-K) can be connected.	——		——
	Detection signal transfer	DC30V 1A (a contact, b contact switching)			——
	Start signal transfer	DC30V 2.5A (a contact, b contact switching)			——
	Detection / start / discharge signal transfer	DC30V 1A (a contact, b contact switching)			——
		Start signal transfer or detection signal transfer switching type			——
	Anomaly signal transfer	DC30V 1A (a contact, b contact switching)			——
		Power supply OFF or blackout (disconnection switching)			——
	Ambient temperature range	0°C~40°C (no condensation)			
	Delay timer circuit	0 to 99 seconds: optional setting			——
	Mode setting circuit	Enabled by AND / OR changeover switch			——
	Standby power source	With connector for standby power source	Built-in		——
Thermistor heat detector		DTA-2 One (heat resistance: 0°C~250°C)			——
Optional	Thermistor heat detector	DTA-2 type (heat resistance: 0°C~250°C)			——
	Signal converter	TTA-2 actuation temperature can be set to 60°C~120°C. DC24V 12mA			——
	Remote control box	RC-3			——
	Interlocking equipment	Gas generator unit (MC-K)			——
	Fire detector	Fixed temperature spot type, smoke, flame detectors			——
	Equipment stop signal transfer	Enabled by relay			——
	Standby power source	NiCd battery (24 VDC/0.45 AH)	Standard equipment		——

■ Automatic fire extinguishing device specifications

Item \ Models		AFF-6B	ADC-20B
Agent		Foam (machine generated foam)	Dry chemical (ABC)
Agent capacity		6.0L	6.0kg
External dimensions of cabinet (H × W × D)		800 × 290 × 250 (mm)	
Total weight		Approx. 24.0 kg	Approx. 23.9 kg
Starting method		Starting with the gas generator	
Nozzle		1/4EX type (four nozzles supplied)	DG-3 type (two nozzles supplied)
Discharge time (seconds)		Approx. 35 sec	Approx. 25 sec
Connecting pipes		Copper pipe ø8×ø6 10 m	
Connecting pipe type		Phosphorus anti-oxidation seamless copper pipe (JIS H3300)	
Pipe connections		Self-sealing with entrenching rings	
Control panel	Type name	GCA-3HG	
	Input power supply	100 VAC/200 VAC ±10 %, 50/60 Hz (Connector switching type) Factory setting: AC200V	
	Power consumption	max 26 VA	
	Output power supply capacity	24 VDC max 0.1A	
	Manual start button	Momentary, gold contact, red point	
	AUTO/MANUAL toggle switch	Toggle switch, gold contact AUTO is selected when delivered	
	Alarm buzzer	Electronic buzzer/ Loudness: 85 dB or more	
	POWER indicator lamp	AC power: Green lamp ON, Standby power: Red lamp ON, Anomalies: Red lamp Blinking	
	Start lamp	Detection: Red Lamp Blinking, Start: Red Lamp ON	
	In-board indicator lamp	Actuation lamp: 5 pcs, Anomaly lamp: 9 pcs.	
	Detector input circuit 1	2 circuits for thermistor heat detectors OR mode detectors (set to 120°C when delivered)	
	Detector input circuit 2	1 circuit (for signal converter or another detector)	
	TEMP. ADJ. (temperature adjustment) knob	Thermistor heat detector, operating temperature: anywhere between 60°C and 120°C	
	Starting output	Connector connected (only for one gas generator)	
	Remote AUTO / MANUAL switching output	Switching to manual operation can be remotely done (possible only when the changeover switch of the control panel is in AUTO).	
	Interlocking output	Five sets of interlocking equipment (MC-K) can be connected.	
	Detection signal transfer	DC30V 1A (a contact, b contact switching) × 1	
	Start signal transfer	DC30V 2.5A (a contact, b contact switching) × 1	
	Detection / start signal transfer	DC30V 1A (a contact, b contact switching) × 1	
		Start signal transfer or detection signal transfer switching type	
	Anomaly signal transfer	DC30V 1A (a contact, b contact switching) × 1	
		Power supply OFF or blackout (disconnection switching)	
	Ambient temperature range	0°C~40°C (no condensation)	
	Delay timer circuit	0 to 99 seconds: optional setting	
	Mode setting circuit	Enabled by AND / OR changeover switch	
	Standby power source	With connector for standby power source	
Thermistor heat detector		DTA-2 One (heat resistance: 0°C~250°C)	
Optional	Thermistor heat detector	DTA-2 One (heat resistance: 0°C~250°C)	
	Signal converter	TTA-2 actuation temperature can be set to 60°C~120°C. DC24V 12mA	
	Remote control box	RC-3	
	Interlocking equipment	Gas generator unit (MC-K)	
	Fire detector	Fixed temperature spot type, smoke, flame detectors	
	Equipment stop signal transfer	Enabled by relay	
	Standby power source	NiCd battery (24 VDC/0.45 AH)	

4. Device Appearance Diagram, Internal Design

Agent type	CO_2 (carbon dioxide)
Agent capacity	2.0kg
Cabinet color	Opal white (JPMA 22-90B)
Total weight	Approx. 16.8 kg

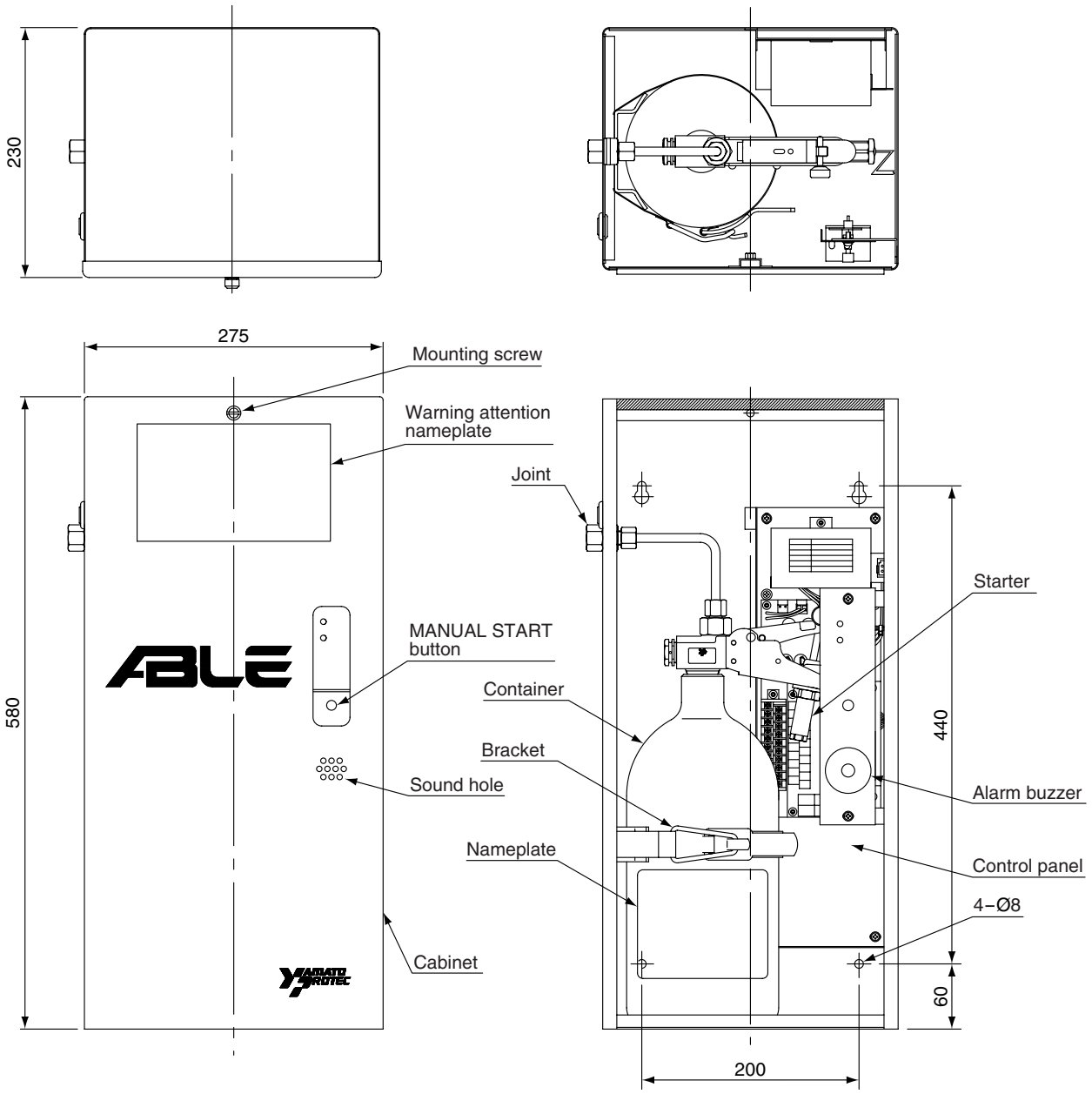

ACO-4B

Agent type	CO_2 (carbon dioxide)
Agent capacity	3.2kg
Cabinet color	Opal white (JPMA 22-90B)
Total weight	Approx. 19.5 kg

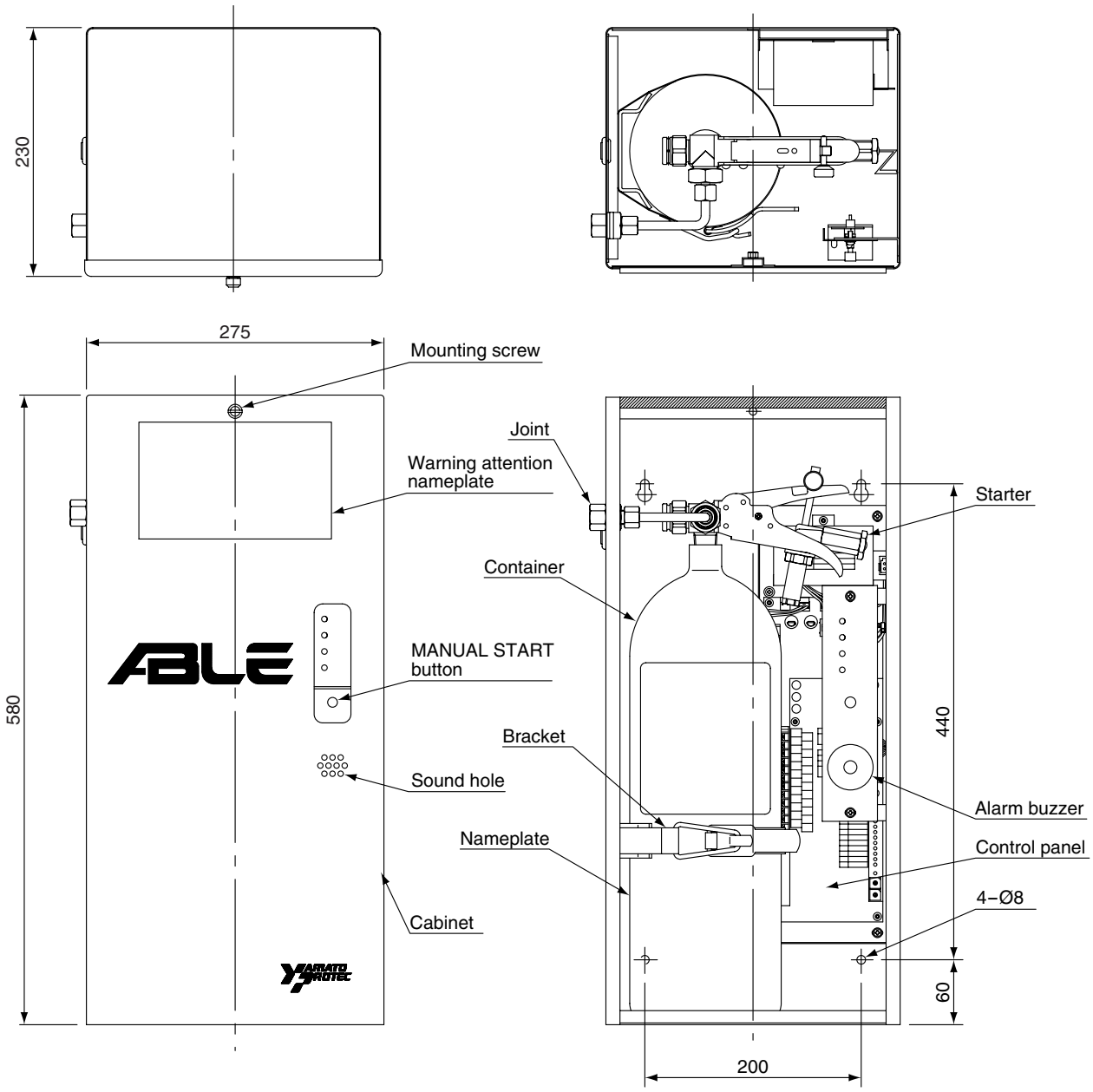

ACO-7B

Agent type	CO_2 (carbon dioxide)
Agent capacity	4.6kg
Cabinet color	Opal white (JPMA 22-90B)
Total weight	Approx. 26.0 kg

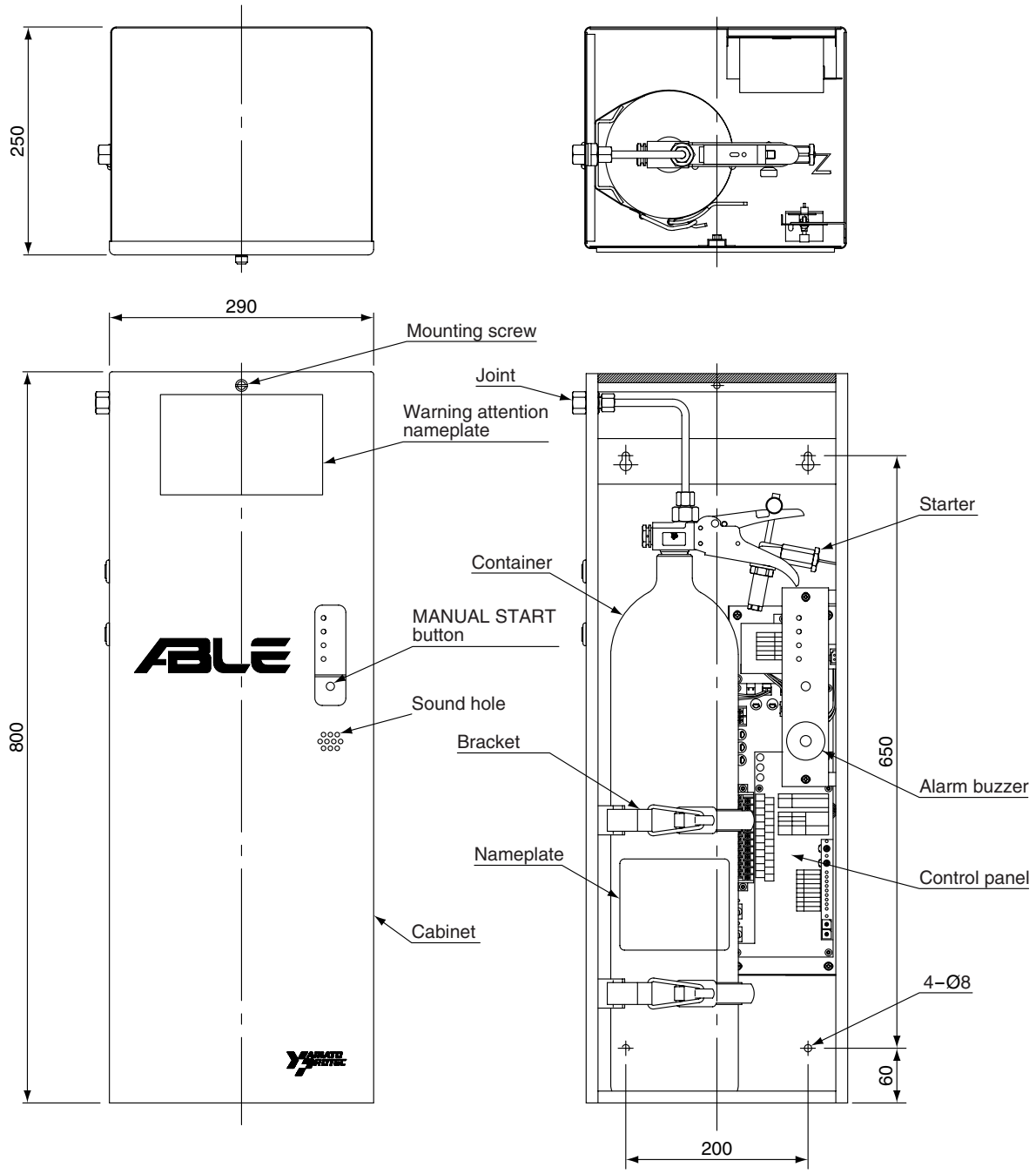

ACO-10B

Agent type	CO_2 (carbon dioxide)
Agent capacity	6.8kg
Cabinet color	Opal white (JPMA 22-90B)
Total weight	Approx. 32.5 kg

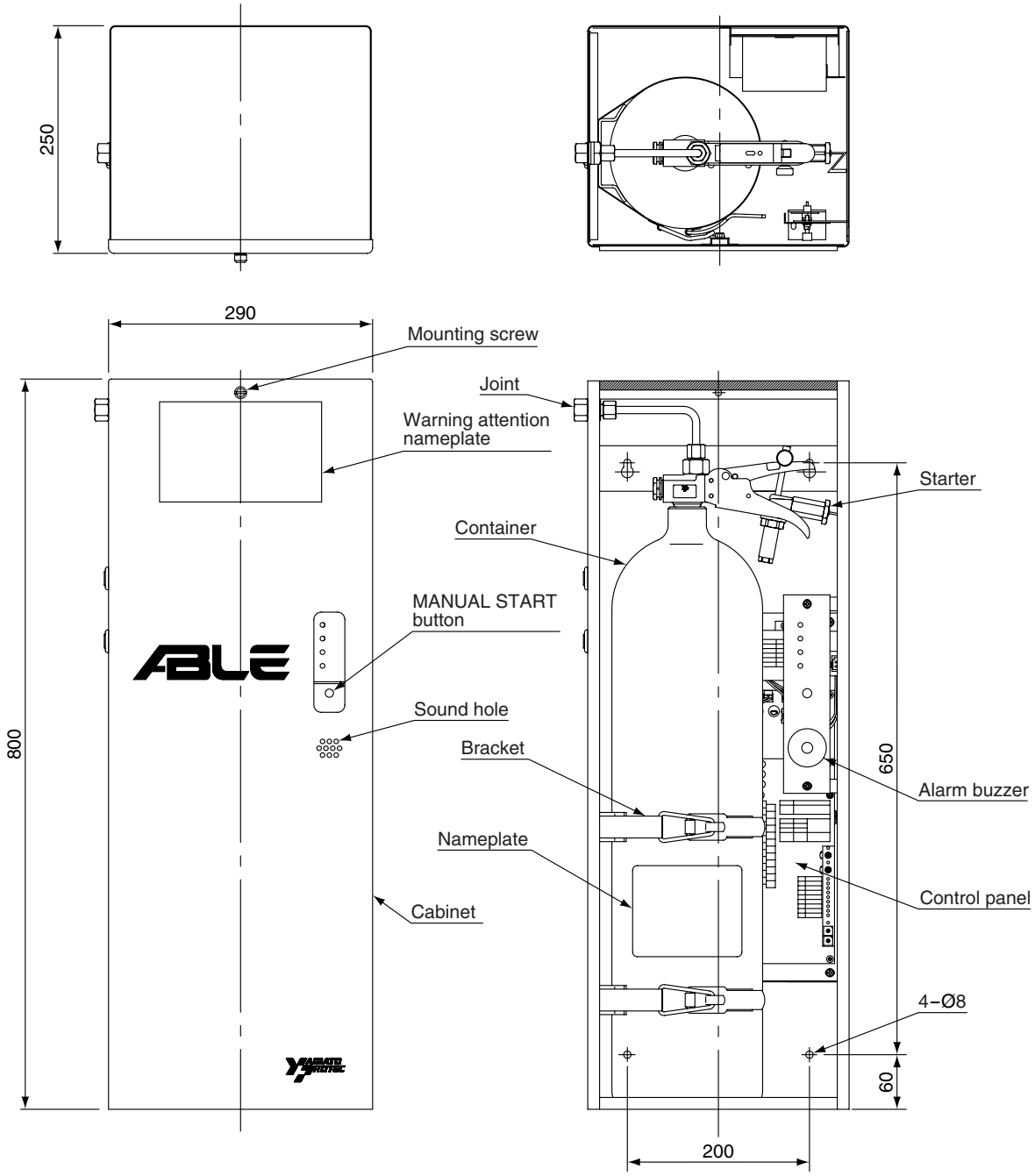

ACO-15B

Agent type	CO_2 (carbon dioxide)
Agent capacity	13.3kg
Cabinet color	Opal white (JPMA 22-90B)
Total weight	Approx. 53.0 kg

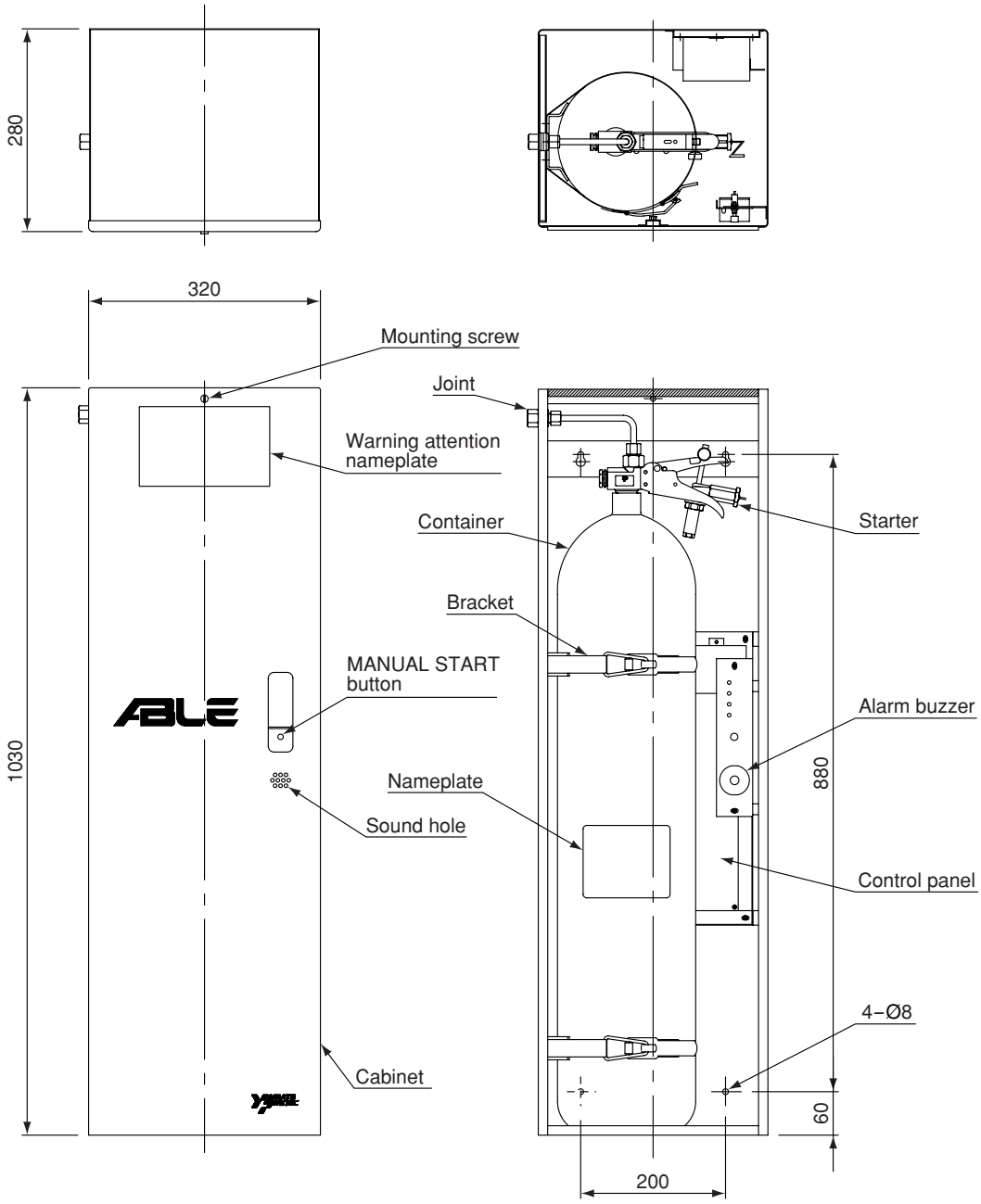

ACO-30B

Agent type	CO_2 (carbon dioxide)
Agent capacity	28kg
Cabinet color	Opal white (JPMA 22-90B)
Total weight	Approx. 175 kg

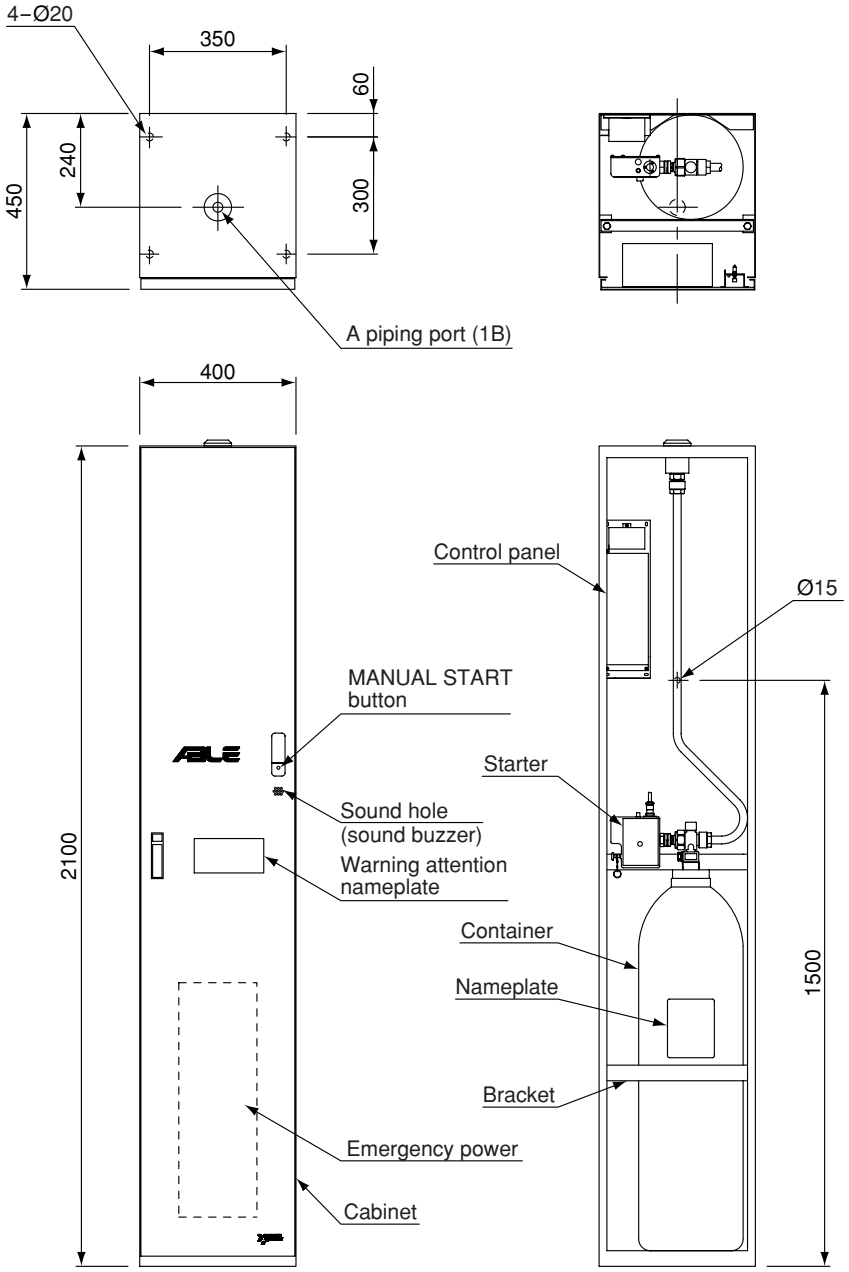

ACO-60B

Agent type	CO_2 (carbon dioxide)
Agent capacity	45kg
Cabinet color	Opal white (JPMA 22-90B)
Total weight	Approx. 215.0 kg

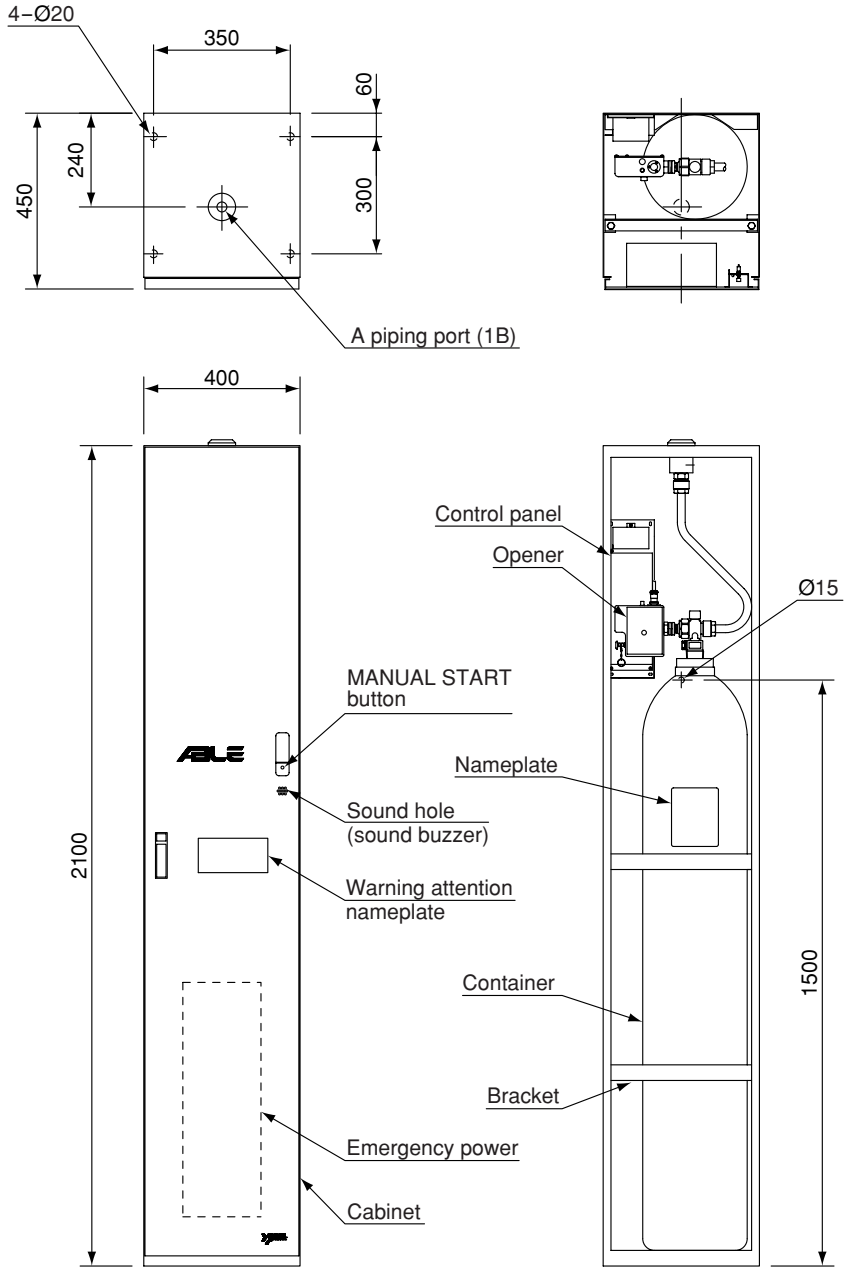

ACO-100B

Agent type	CO_2 (carbon dioxide)
Agent capacity	6.8kg
Cabinet color	Opal white (JPMA 22-90B)
Total weight	Approx. 30.0 kg

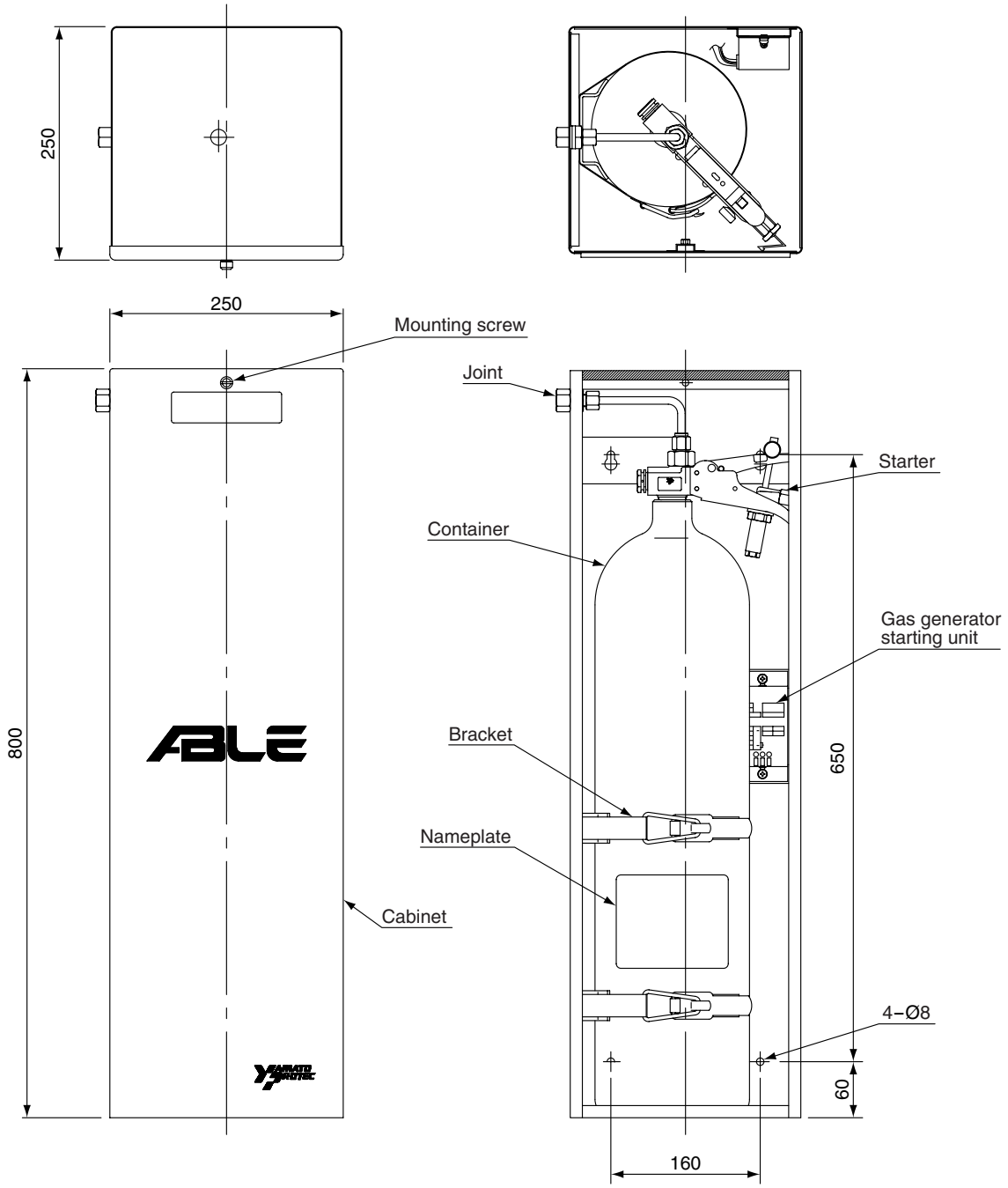

ACO-15BZ

Agent type	Foam (machine generated foam)
Agent capacity	6.0L
Cabinet color	Opal white (JPMA 22-90B)
Total weight	Approx. 24.0 kg

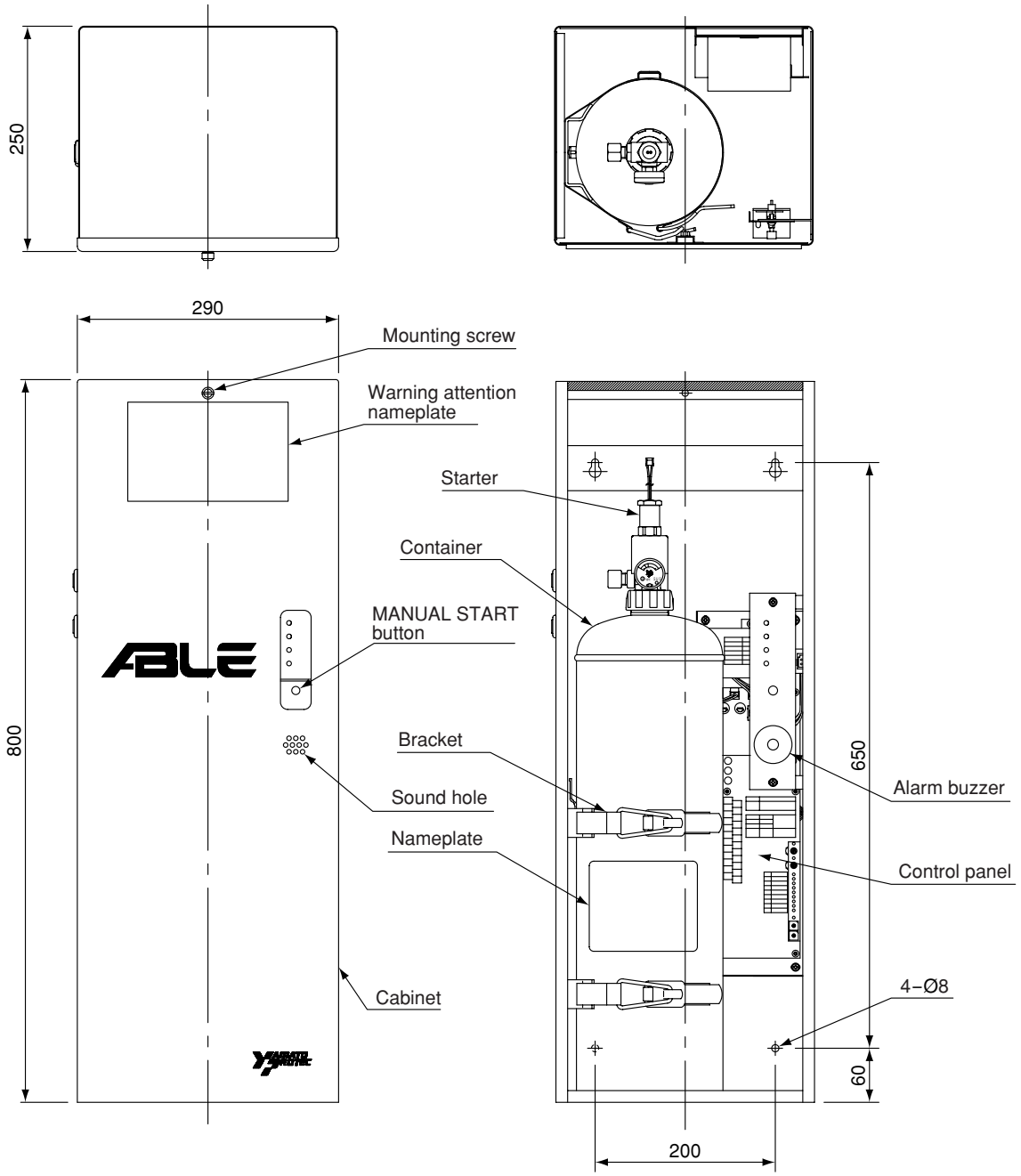

AFF-6B

Agent type	Dry chemical (ABC)
Agent capacity	6.0kg
Cabinet color	Opal white (JPMA 22-90B)
Total weight	Approx. 23.9 kg

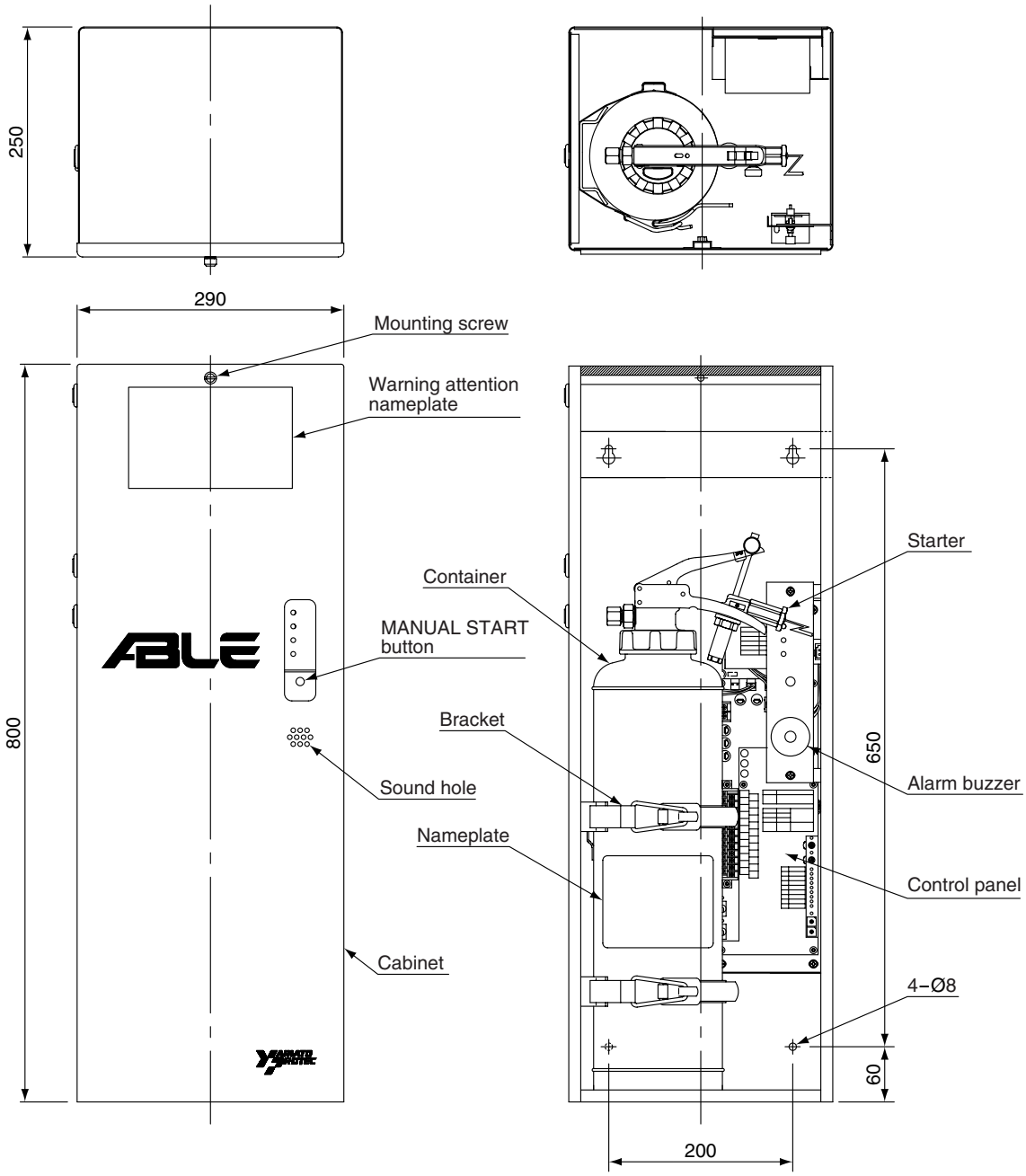

ADC-20B

Nozzle	SUS304 angle 15°
Nozzle cover	POM (polyacetal)
Cap nut	SUS304
Discharging pipe	SUS304 Ø8 ×Ø6
Mounting bracket	C3604

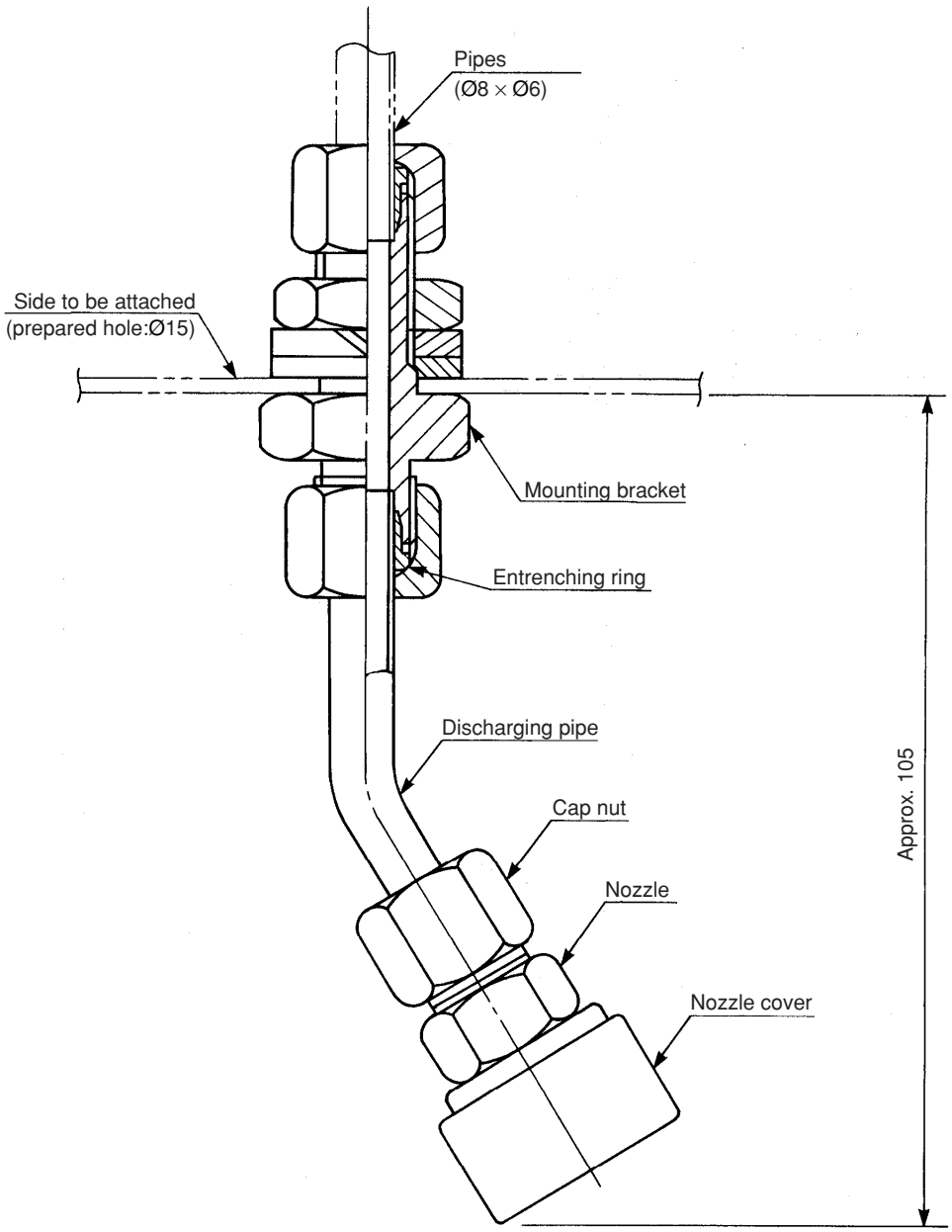

Nozzle for CO_2 agent (1/4C25 type)

Nozzle	SUS304 angle 70°
Nozzle cover	POM (polyacetal)
Cap nut	SUS304
Discharging pipe	SUS304 Ø8 × Ø6
Mounting bracket	C3604

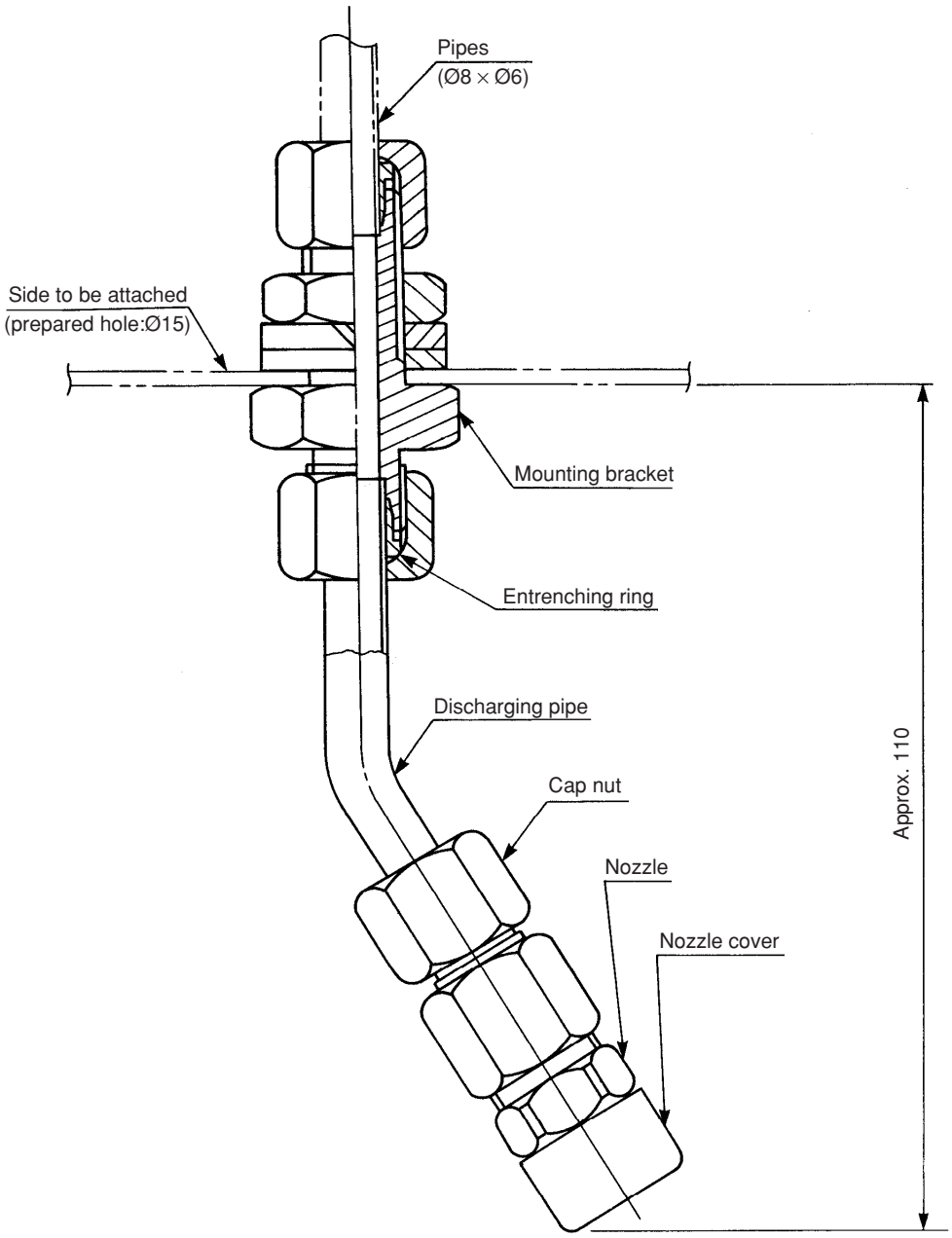

Nozzle for foam agent (1/4EX type)

Nozzle	SUS304 angle 60°
Nozzle cover	POM (polyacetal)
Cap nut	SUS304
Discharging pipe	SUS304 Ø8 × Ø6
Mounting bracket	C3604

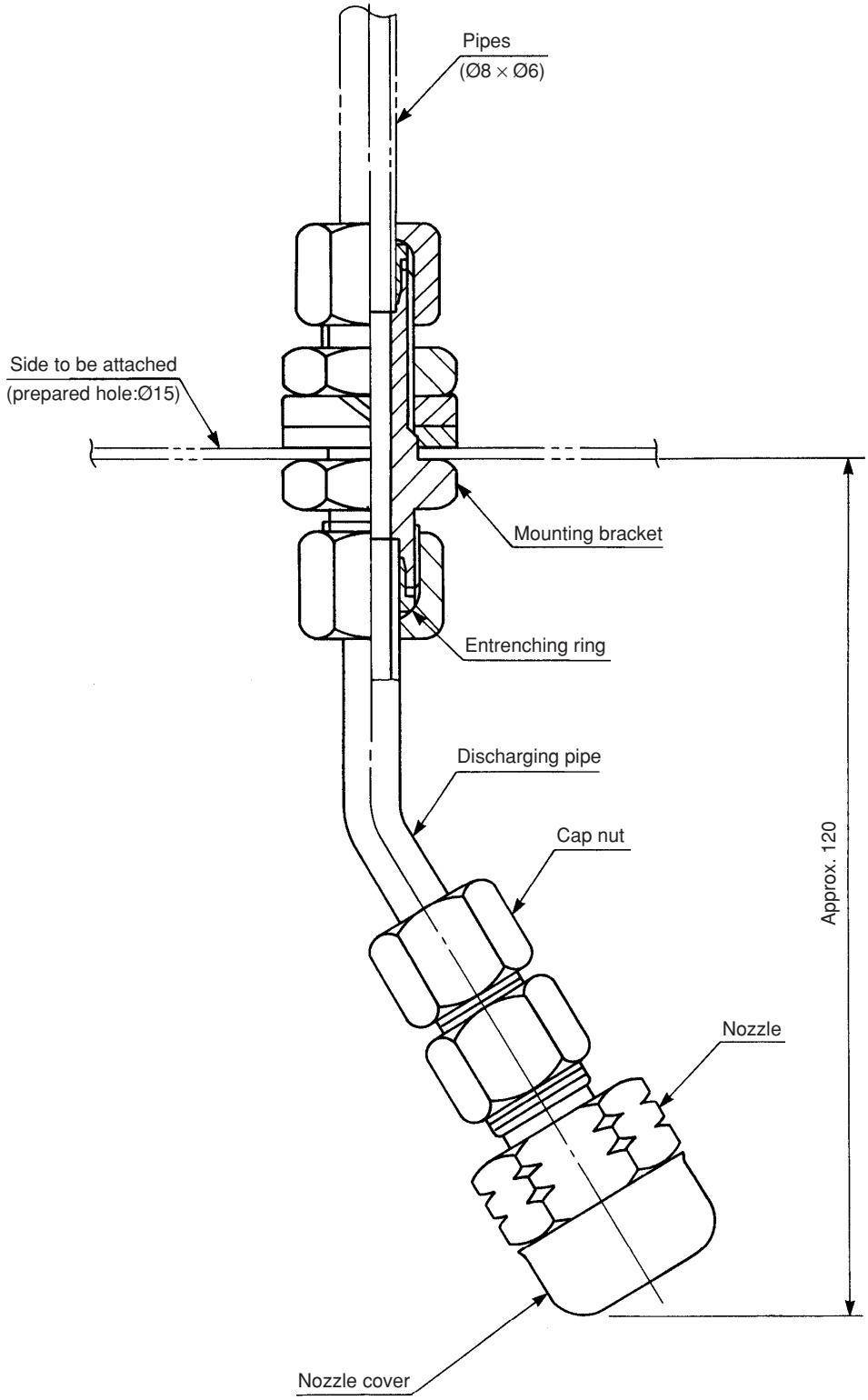

Nozzle for dry chemical agent (ABC) DG-3 type

Specifications	Case	Size	H150×W100×D60, spray-proof desing
		Material	SPCC, t=1
		Finish	Melamine finish, Munsel number : 2.5Y9/2
	Switch	Contact capacity	6A, AC125V
	Indicator lamp	Rating	24 VDC, with resistor
			LED (green)

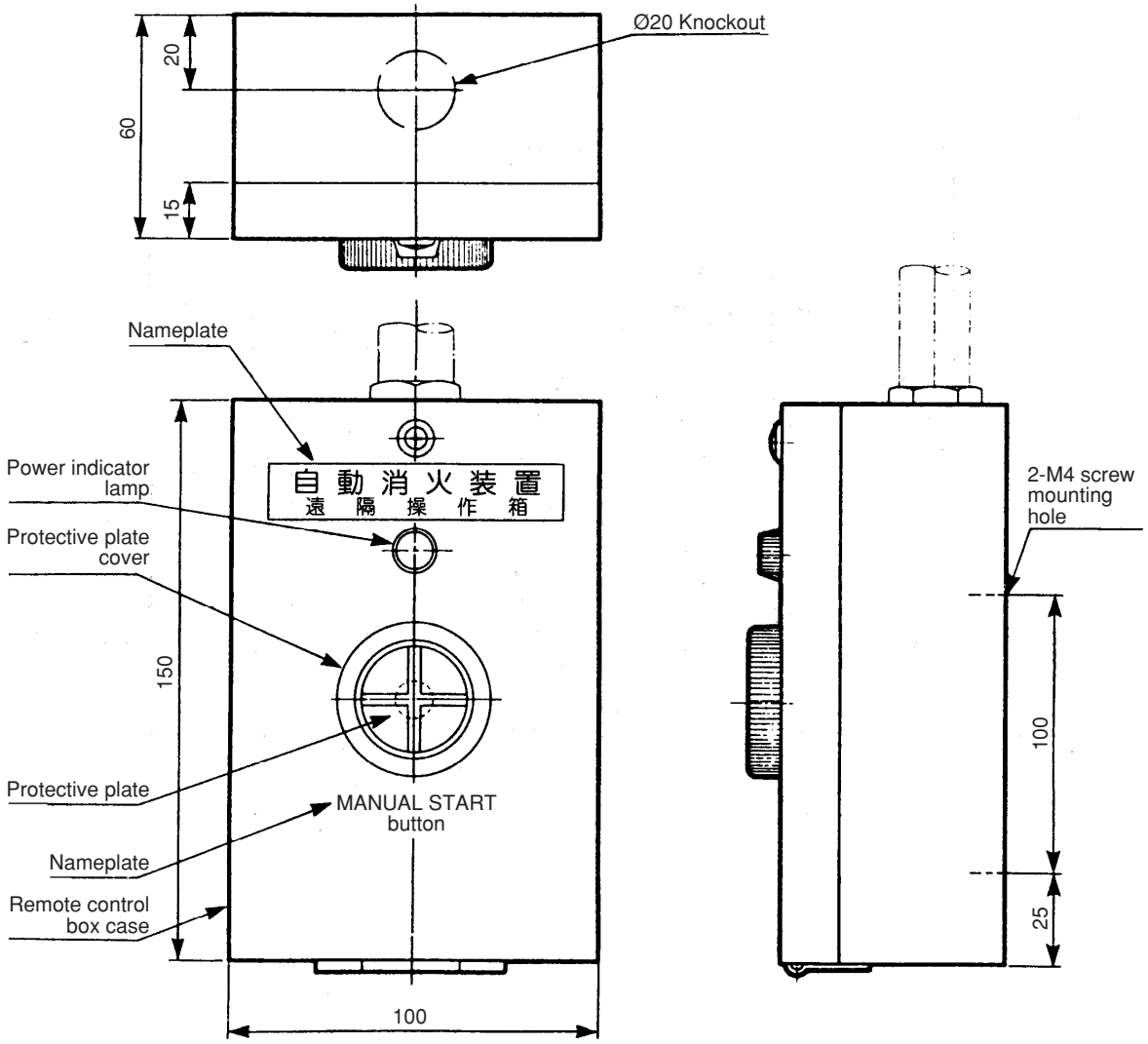

Remote control box (RC-3)

Type	DTA-2
Device used	Molded glass chip thermistor
Material	Stem: SUS304, lead wire: PTFE (Teflon) wire 7/0. 12
Shape/size	Stem length: 35 mm; Lead wire length: 5 m
Thermal time	10 seconds or less (in 5 m/sec airflow)
Insulation resistance	50 MΩ or more at 500 VDC
Dielectric strength	No abnormal condition for one minute at 500 VAC
Operating temperature range	0°C~250°C

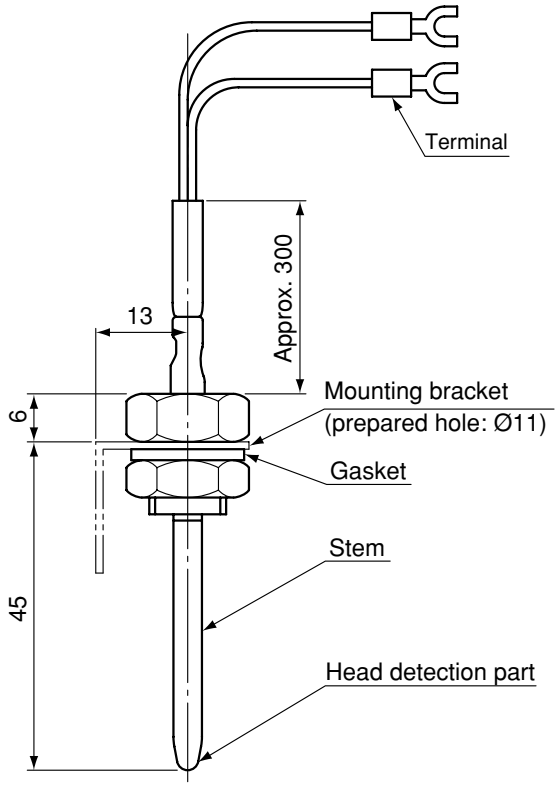

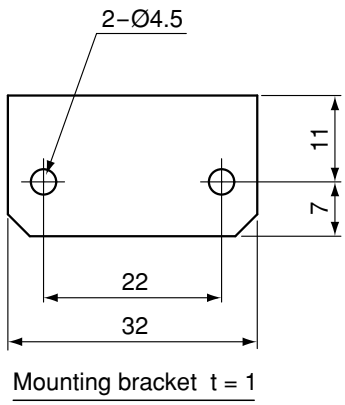

Material SUS304

Thermistor heat detector (DTA-2)

Nominal voltage	24V
Nominal capacity	0.45Ah
Monitoring time	One hour

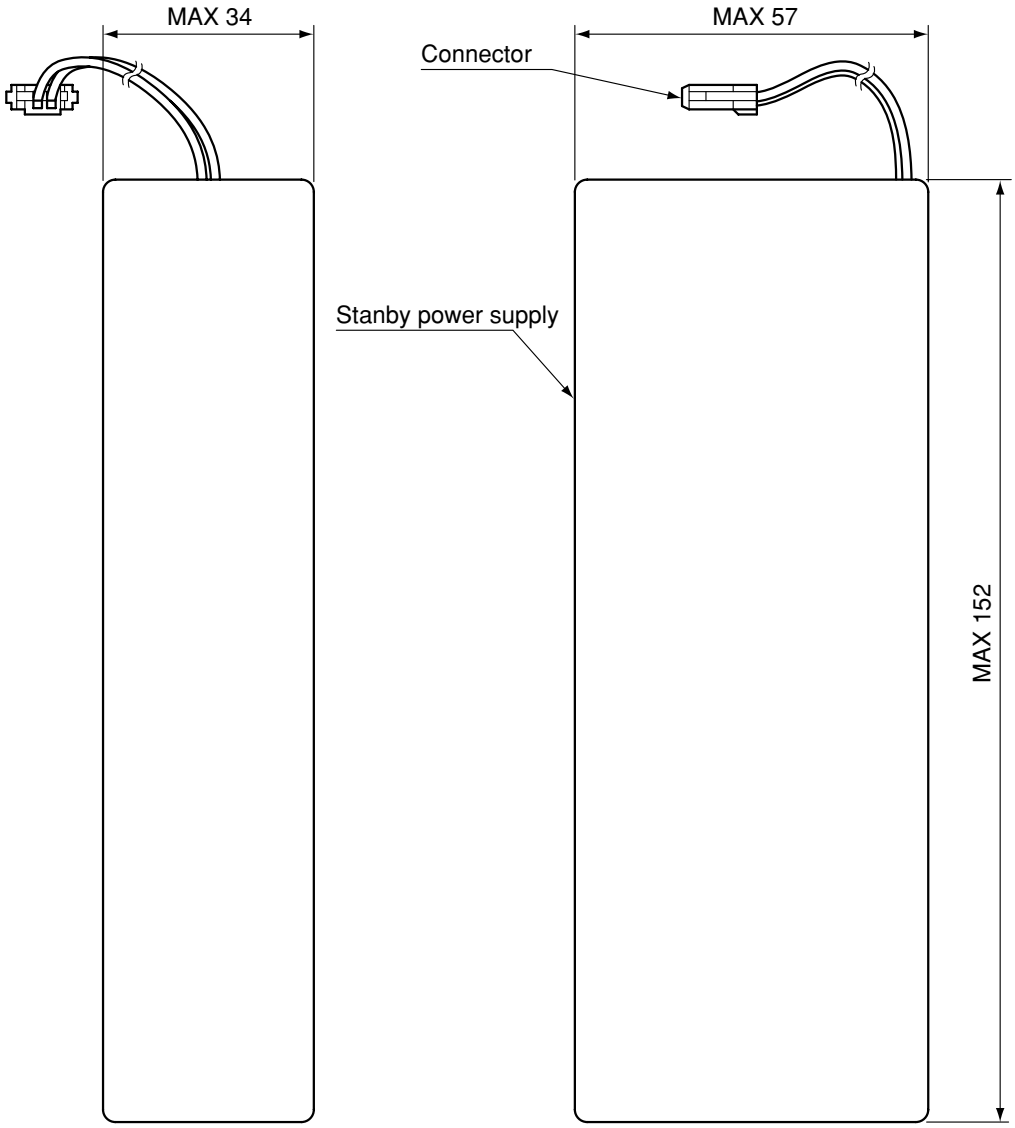

- **Standby power supply**

(1) Although the life of a standby power supply is three to five years in the normal use conditions, it is greatly influenced by installation environment, the use state, etc. When anomalies, such as reduced capacity, liquid leak or rusting, are found, prompt replacement is needed.

(2) Standby power supply must be periodically replaced because reduced capacity etc. advances even if there are no anomalies in appearance.

(3) Please do not discard a used standby power supply, but contact its sales office or manufacturer.

Standby power sourcesupply

Specifications	Case	Size	H68 × W140 × D20 (mm)
		Material	SPCC. t=1
		Finish	Munsel number: N-4.0
	Rating voltage		24VDC 12mA
	Temperature adjustment range		60°C~120°C
	Monitor lamp		LED green (turned off when operating)
	Detection signal output		Open collector output (terminal resistance: 10Ω)
	Disconnection signal output		Open collector output (detector line disconnection output)
	Operating temperature range		–10°C~50°C
Remarks	Compatible control panel Compatible detector		GCA type Thermistor heat detector (DTA type)

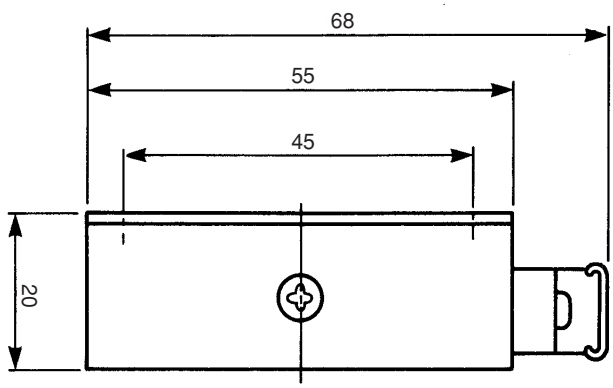

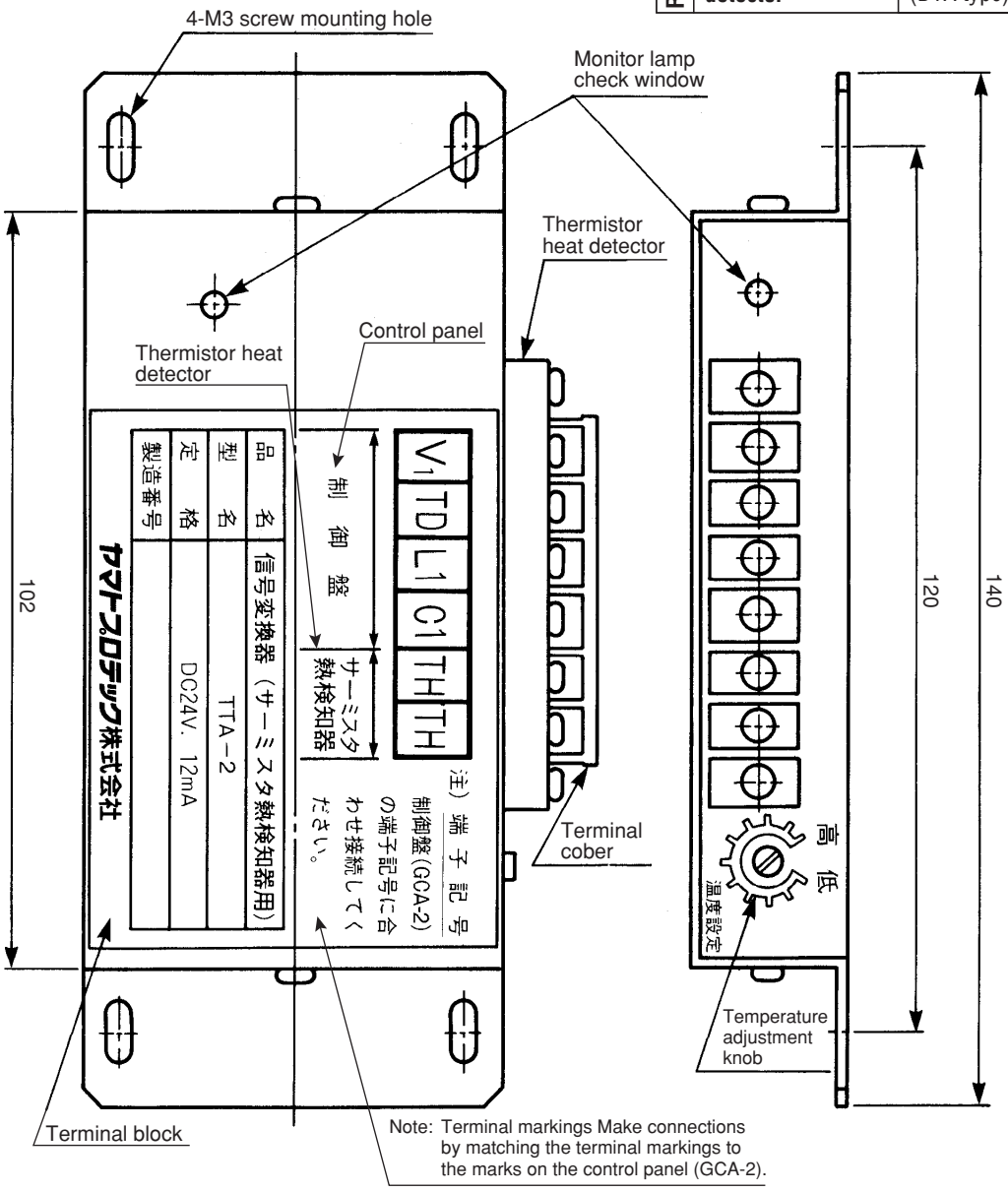

Note: Terminal markings Make connections by matching the terminal markings to the marks on the control panel (GCA-2).

Signal converter (TTA-2)

5. Operation Flow Chart

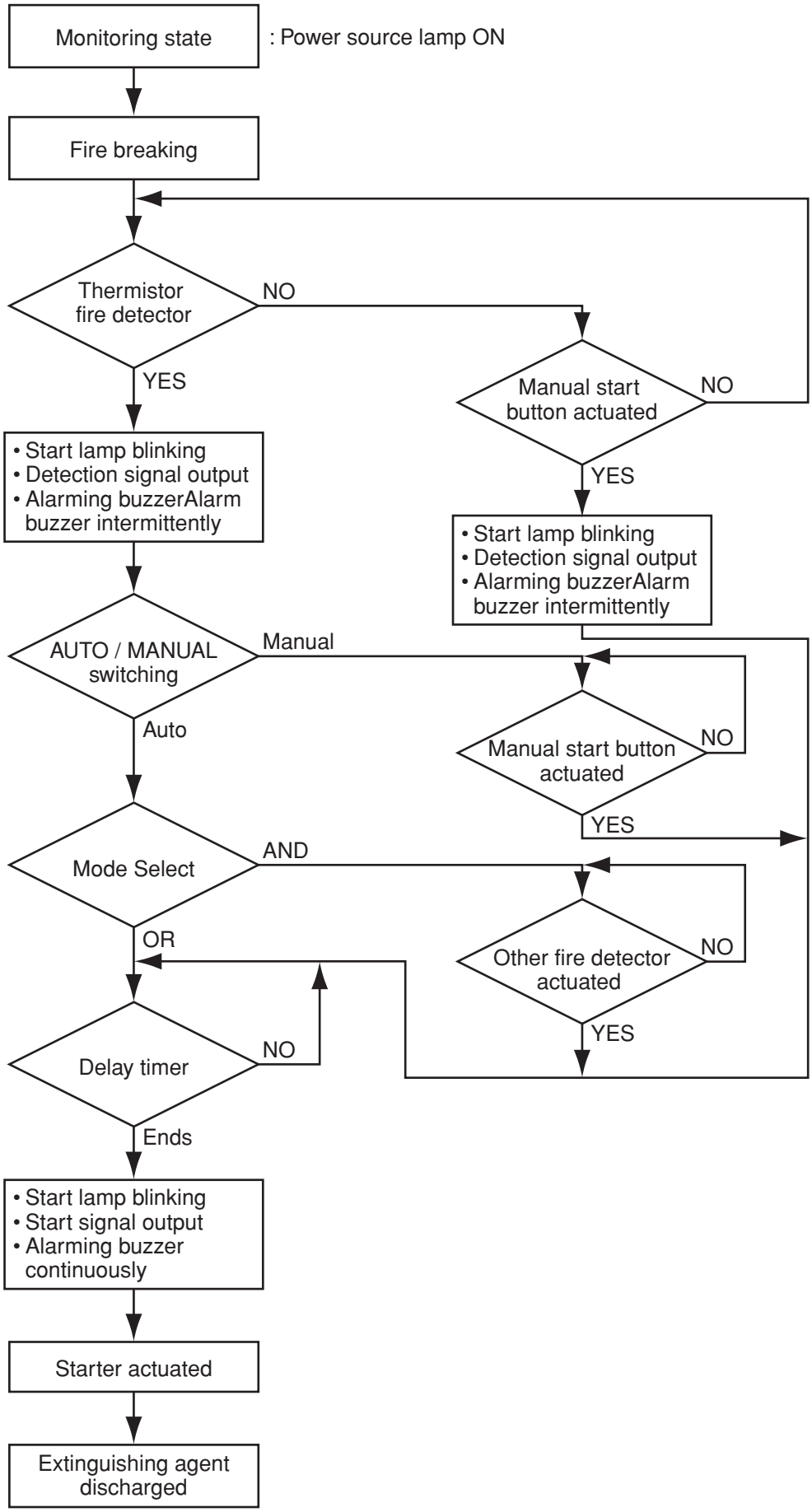

■ Motion table

AUTO/ MANUAL switchover	MODE select	Motion details	Delay timer	POWER indicator lamp	Start lamp	Anomaly lamp	Alarm buzzer	Starter	Detection signal transfer	Start signal transfer	Anomaly signal transfer
AUTO	N/A or OR	Activates thermistor heat detector / other fire detector	N/A	○	○		○	○		○	
			Timer running	○	◌		◌		○		
			Timer ends	○	○		○	○	○	○	
	AND	Activates thermistor heat detector / other fire detector	—	○	◌		◌		○		
		Activates thermistor heat detector or other fire detector	N/A	○	○		○	○		○	
			Timer running	○	◌		◌		○		
			Timer ends	○	○		○	○	○	○	
	—	MANUAL START button	N/A	○	○		○	○		○	
			Timer running	○	◌		◌		○		
			Timer ends	○	○		○	○	○	○	
MANUAL	—	Activates thermistor heat detector / other fire detector	—	○	◌		◌		○		
		MANUAL START button	N/A	○	○		○	○		○	
			Timer running	○	◌		◌		○		
			Timer ends	○	○		○	○	○	○	
—	—	Disconnection of wiring Anomaly of starter	—	◌		◌	△				(○) *1
—	—	Power failure / power switch OFF	—	RED *2							○/○

Note:

(1) ○ continual operation ◌ intermittent operation △ periodic operation

(2) Power source light: Green light ON during AC operation, Red light ON during standby power operation

(3) *1: Output is enabled by jumper switching.

(4) *2: Only when standby power is connected.

6. Circuit Block Diagram

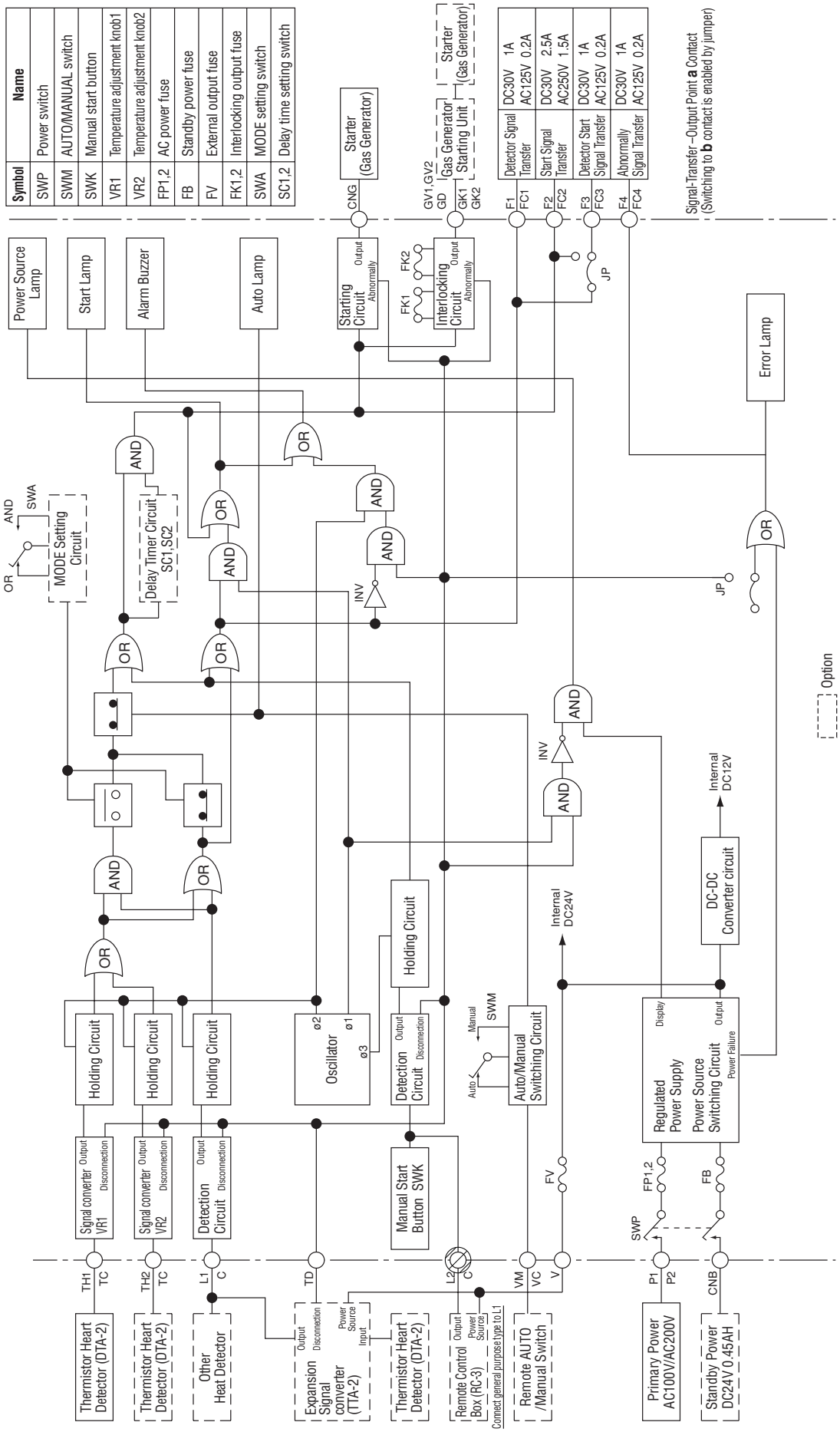

■ Description table of terminals (B type)

Terminal markings	Application	Description	Remark	
TH1	Thermistor heat detector (DTA-2)	Any temperature can be set between 60˚C and 120˚C using the VR1 knob	Connect a 51kΩ resistor when not in use	
TC				
TH2	Thermistor heat detector (DTA-2)	Any temperature can be set between 60˚C and 120˚C using the VR2 knob	Connect a 51kΩ resistor when not in use	
TC				
L1	Other fire detector input	Other fire detector and signal converter detection signal output connection	Connect a 10kΩ terminal resistor	
C				
V	External power source output	Output capacity DC24V 0.1A		
TD	Abnormal input	Signal converter Disconnection output connection		
KL	Display of starting output	The same output displayed as the main body starting lamp		
L2	Remote manual start input	A disconnection detection function is available	Connect a 10kΩ terminal resistor	
C				
VM	Remote AUTO / MANUAL switching input	With short-circuit between VM and VC, switch to manual operation.		
VC				
GV1	Interlocking output	Power source output DC12V for gas generator starting unit	Up to five gas generator starting units can be connected. 10kΩ termination resistor between GK1 and GK2.	*1
GV2				
GD		Abnormal input for gas generator starting unit		
GK1		Starting output for gas generator starting unit		
GK2				
F1	Detection signal transfer	Actuated when thermistor heat detector or sensor is tripped or manual start button is operated.	a contact (switching to b contact is enabled by jumper pin) contact rating DC30V 1A, AC125V 0.2A	
FC1				
F2	Start signal transfer	Started when the starting conditions are satisfied.	a contact (switching to b contact is enabled by jumper pin) contact rating DC30V 2.5A, AC250V 1.5A	
FC2				
F3	Detection and Start signal transfer	Switching to detection signal transfer is enabled by the jumper pin.	a contact (switching to b contact is enabled by jumper pin) contact rating DC30V 1A, AC125V 0.2A	
FC3				
F4	Anomaly signal transfer	Actuated when power source is OFF or at the time of power failure. Actuation is enabled by switching of jumper pin during disconnection or other anomalies.	a contact (switching to b contact is enabled by jumper pin) contact rating DC30V 1A, AC125V 0.2A	
FC4				
P1	Primary power source	Input voltage is changed by the connector.	AC100V / AC200V ± 10%	*1
P2				
Connector				
CNB	Standby power connection	Battery connection	DC24V 0.45Ah	*1
CNG	Starting device connection	Gas generator		
R	AC input	Terminal board separately mounted in the package		*2
S				
SL+	Connected to opener	Terminal board separately mounted in the package		*2
SL–				

*1 Not to be used for types ACO-60B, 100B (setting of AC 100V/AA 200V required)
*2 Only for types ACO-60B, 100B

7. Daily Operation

1. Monitoring status

1) The Power source lamp is ON in green.
2) Automatic monitoring status
   The Auto lamp is ON in green.
   In the event of fire, if the AUTO/MANUAL switch is set to the AUTO position, the system will start the fire extinguishing operation automatically.
   When the mode select switch is in “AND” or the AND lamp on the control panel turns ON, the start lamp blinks and the alarming buzzer intermittently sounds due to the actuation of either the thermistor heat detector or other fire detector, but the extinguishing agent is not discharged. If both are actuated, the extinguishing agent will be discharged and the fire will be put out.
3) Manual monitoring status
   When the AUTO/MANUAL switch is in “MANUAL” or the MANUAL lamp on the control panel turns ON, the start lamp blinks and the alarming buzzer intermittently sounds due to the actuation of the thermistor heat detector or other fire detector in case of fire, but the extinguishing agent is not discharged.

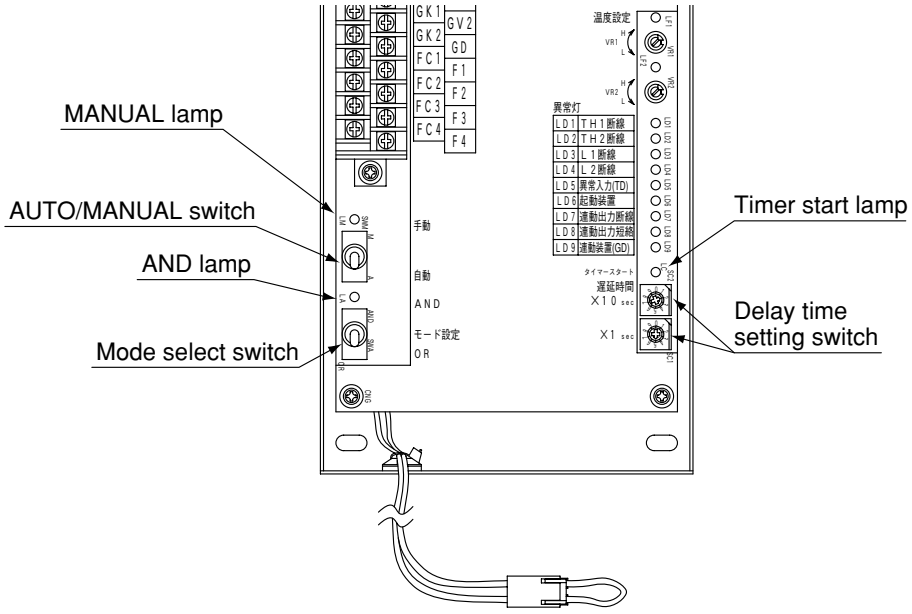

In-housing substrate

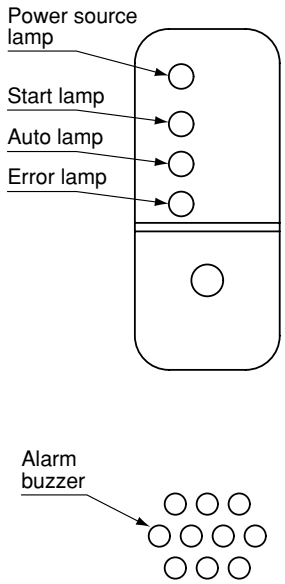

On-housing display

2. Operation

1) Automatic status
   All of the actions will be started automatically. You can also operate the system manually while in AUTO mode.

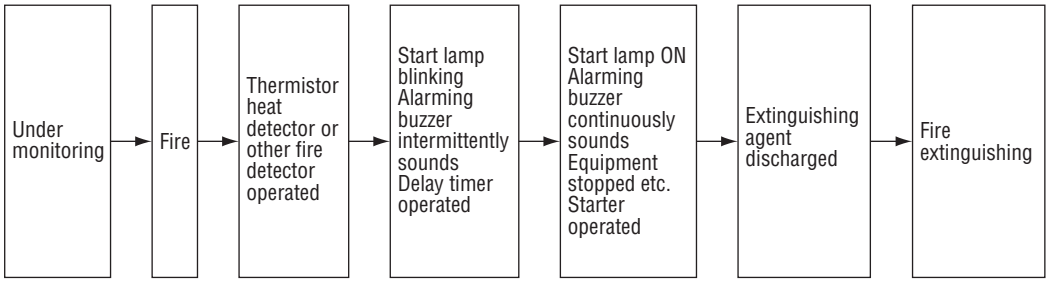

When the mode select switch is in "AND" or the AND lamp on the control panel turns ON,

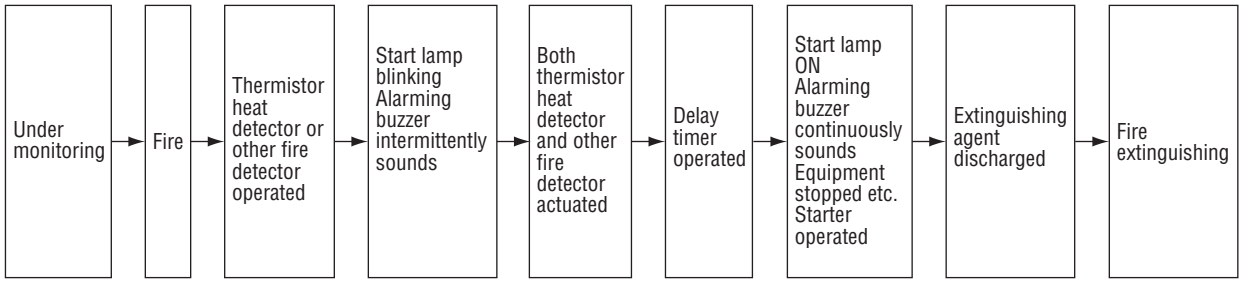

2) Manual status

Pressing the manual start button allows the system to initiate fire extinguishing operations. (You also can discharge the extinguishing agent by opening the cabinet door and pressing down the upper lever on the container and holding it down. Since the AFF-6B type fire extinguishing devices have no lever, lever-actuated discharge is not available.)

(Note: Operate the lever only in case of a fire.)

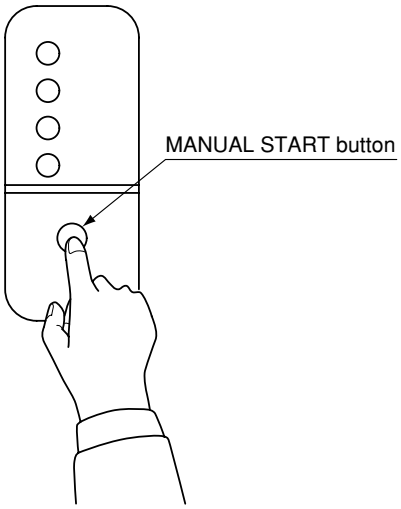

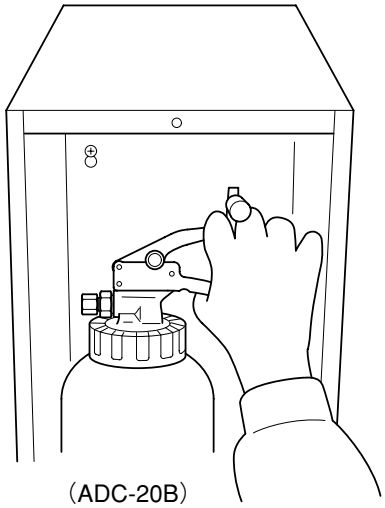

3. Operating conditions

1) The start lamp is ON.

It blinks when the thermistor heat detector or other fire detector are actuated during the manual operation state or with the mode select switch in “AND” (the AND lamp is ON) or when the delay timer is running.

2) The alarming buzzer continuously sounds.

It intermittently sounds when the thermistor heat detector or other fire detector are actuated during the manual operation state or with the mode select switch in “AND” (the AND lamp is ON) or when the delay timer is running.

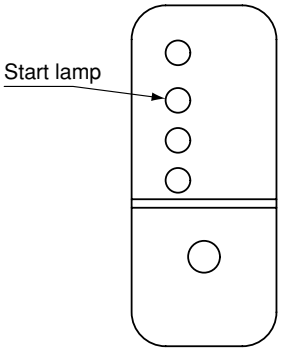

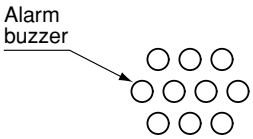

4. The state at the time of anomalies

1) In the case of power failure, the power source lamp turns OFF, and an abnormal signal transfer (F4-FC4) is outputted.
   When the standby power supply is connected, the power source lamp turns ON in red, Anomaly lamp blinking and an abnormal signal transfer (F4-FC4) is outputted.
   Note: If the voltage of the standby power supply falls to less than 12V during operation by the standby power, the standby power input is cut off and the device is completely powered off for protection of operation. Therefore, the power source lamp will be OFF.
2) In the case of anomalies such as disconnection At the time of disconnection, short circuit or other anomalies as stated below, the Error lamp on the corresponding control panel turns ON and the power source lamp blinks. Moreover, the alarming buzzer intermittently beeps.

	Description of anomalies	Anomaly lamp on control panel
Disconnection	Thermistor heat detector wiring TH1-TC, TH2-TC	TH1 disconnection, TH2 disconnection
	Other fire detector wiring L1-C	L1 disconnection
	Remote control box manual starting wiring L2-C	L2 disconnection
	Thermistor heat detector wiring of signal converter (TD input)	Abnormal input (TD)
	Gas generator starting unit starting output wiring GK1-GK2	Disconnection of interlocking output
Short circuit	Gas generator starting unit starting output wiring GK1-GK2	Short circuit of interlocking output
Anomalies	Disconnection of connector for starter and gas generator, and anomalies of starting circuit	Starter
	Disconnection of connector for starter of gas generator starting unit and gas generator, and anomalies of starting circuit (GD input)	Interlocking device (GD)

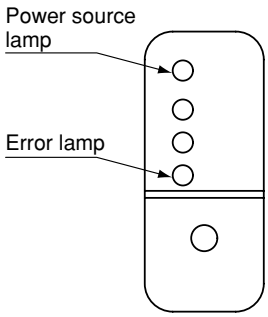

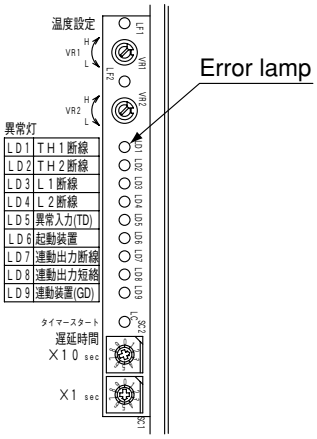

5. After the system is operated

1) Turn the POWER switch OFF to restore the system.
2) After the system has been operated, you must contact us or our agents to have the fire extinguishing agent refilled and the generator replaced.

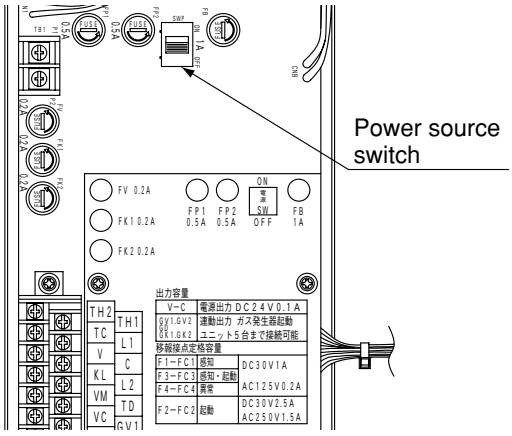

Installation

1. Installation Procedure ····· 31
2. Accessories and Spare Parts ····· 32
3. Installing the Cabinet ····· 33
4. Installing Nozzles and Detectors ····· 34 - 35
5. Copper Pipe Arrangement ····· 36 - 37
6. Wiring ····· 38 - 49
7. Setting Control Panel Switches ····· 50 - 54
8. Testing and Setting ····· 55 - 61
9. Check Sheet ····· 62

1. Installation procedure

The following steps must be performed in the order shown.

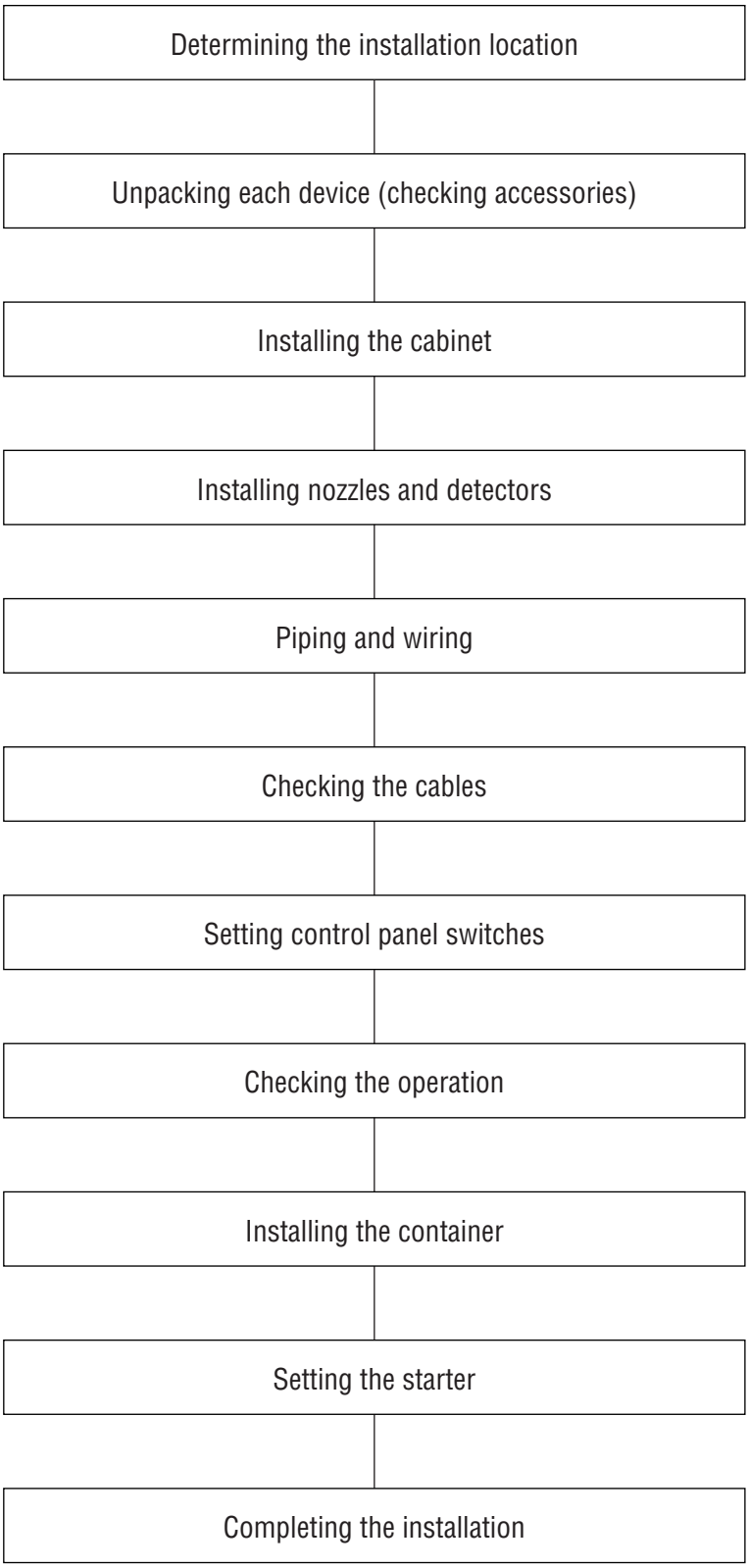

2. Accessories and Spare Parts

	Accessories	Quantity
(1)	Thermistor heat detector (DTA-2), gasket, with crimp-type terminal	1
(2)	Thermistor heat detector mounting plate	1
(3)	Thermistor heat detector mounting screws, spring washers, flat washers, hex nuts	2/each
(4)	Nozzle (with mounting bracket)	1 pair
(5)	Tees	1 set
(6)	Mounting bracket	1 pair
(7)	Cabinet mounting bolts M6 L=20	1 set
(8)	Elbow	1
(9)	Copper pipe (ø8 × ø6) 10m	1
(10)	Spare rings for copper pipe joint	5
(11)	Copper pipe retaining bands	5
(12)	Band mounting screws, spring washers, flat washers, hex nuts	5/each
(13)	Tie-wraps (made of nylon)	10
(14)	“Full Automatic Extinguishing System” Nameplate	1
(15)	Label (indicating the expiration date of a gas generator)	1

*In case of types ACO-60B, 100B

	Accessories	Quantity
(1)	Thermistor heat detector (DTA-2), gasket, with crimp-type terminal	1
(2)	Thermistor heat detector mounting plate	1
(3)	Thermistor heat detector mounting screws, spring washers, flat washers, hex nuts	2/each
(4)	Storage container (68L or 42L)	1
(5)	YSLA type opener	1
(6)	Opener cord (HPC)	1
(7)	Connecting tube (16H-68)	1
(8)	Connecting packing	1
(9)	Container pressure board	2
(10)	Correction paint	1
(11)	Cabinet door key	1
(12)	Tie-wraps (made of nylon)	10
(13)	“Full Automatic Extinguishing System” Nameplate	1

	Spare parts	Quantity
(1)	Fuses 250V 0.5A , 125V 1A , 125V 0.2A	1/each
(2)	Termination resistor 10 kΩ	2

3. Installing the Cabinet

Remove the storage container from the cabinet.
Secure the cabinet to a mounting surface using the mounting holes on the back of the cabinet.
(For ACO-60B and 100B, please use the mounting holes on the undersurface of the cabinet as well.)

Mounting Position

You should install the cabinet to a position where:

(1) the MANUAL START button can be operated easily.

(2) the length of copper pipe connecting the nozzles to it can be less than 8 m.
(Except for ACO-60B and 100B)

(3) it will not be splashed.

(4) daily checks can be conducted easily.

Dimension of mounting holes on back of cabinet

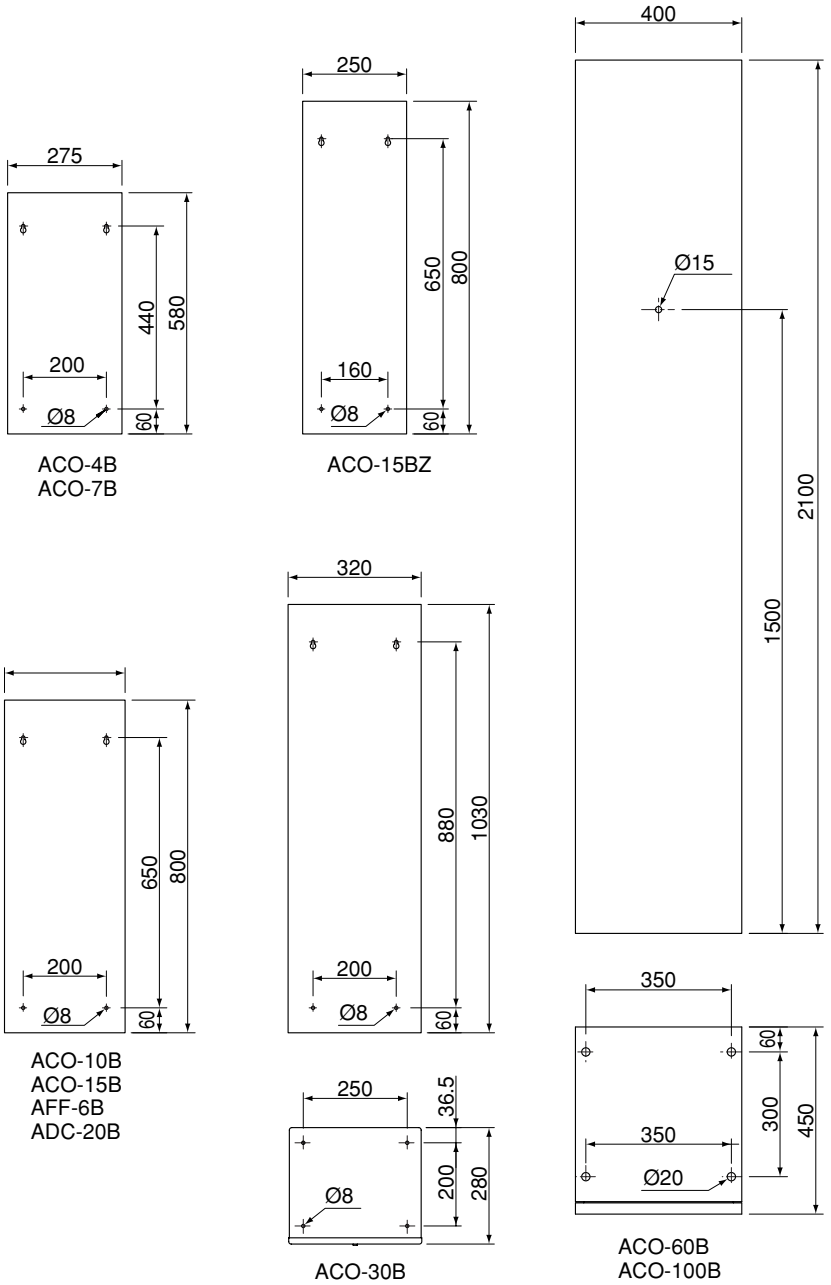

4. Installing Nozzles and Detectors

1. Installing Nozzles

1) Install two nozzles per cabinet in the basic configuration. ANF-6 models, however, may have four nozzles. (However, AFF-6B type, four nozzles per cabinet.)
2) Install them at the position appropriate for putting out fires.
3) The nozzle should be installed at a position no less than 1m above the target.
4) Make a hole 15 mm in diameter on the mounting surface.
5) As shown in the figure at right, secure it using the mounting bracket attached with the discharge nozzle.
6) If you cannot secure it, support it at an adjacent point.
7) When you wish to use additional nozzles, four nozzles per cabinet are available in total. Additional nozzles (including two tees) are optional.
   (*As for types ACO-60B, 100B, spray heads for carbon dioxide)

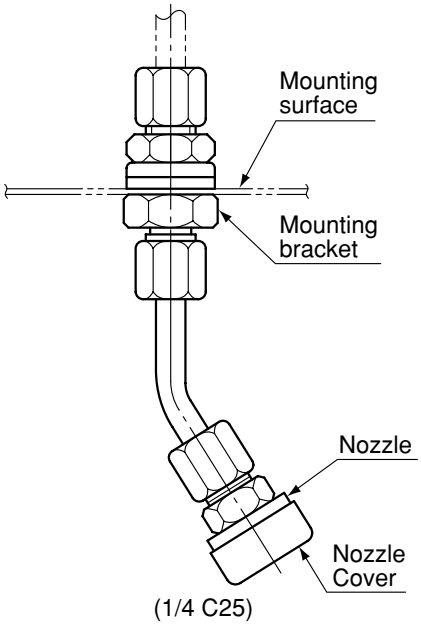

2. Installing Thermistor Heat Detectors

1) One thermistor heat detector (DTA-2) is provided per cabinet. If you wish to add detectors, consult “6. Wiring”.
2) The detector should be installed at a location suitable for fire prevention. Also, the detector must be capable of detecting flames.
3) If the detector cannot be installed at the location described above, when a machine tool is surrounded by protective barriers and the room has a low ceiling, install the detectors near the ceiling.
4) When installing the detector (DTA-2) directly to the mounting surface, refer to the figure below.

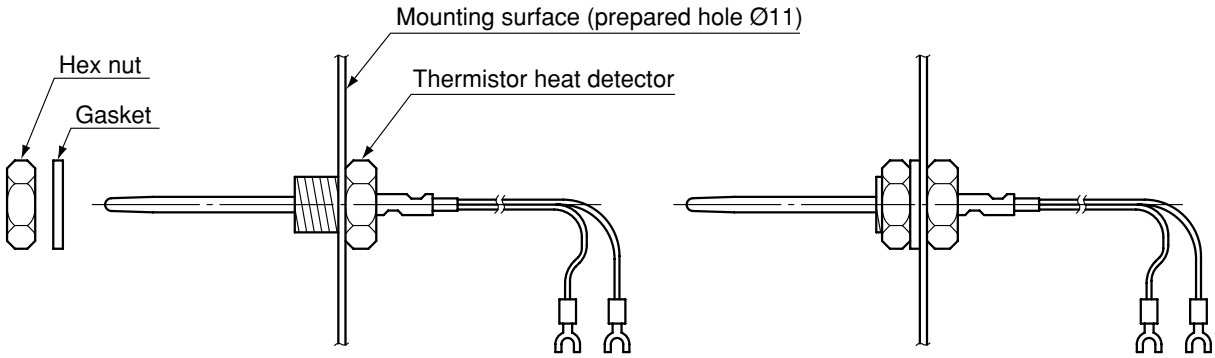

5) When installing the detector (DTA-2) using the included detector mounting plate, refer to the figure below.

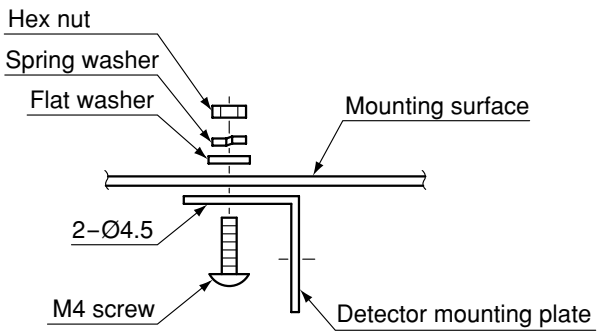

Attach the detector mounting plate to the mounting surface with two screws.

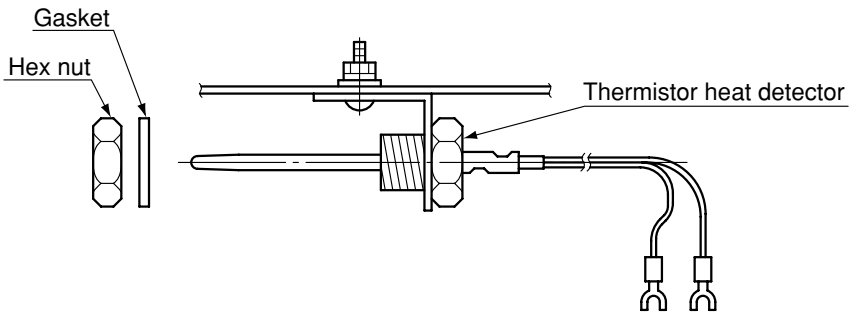

Secure it with a hex nut.

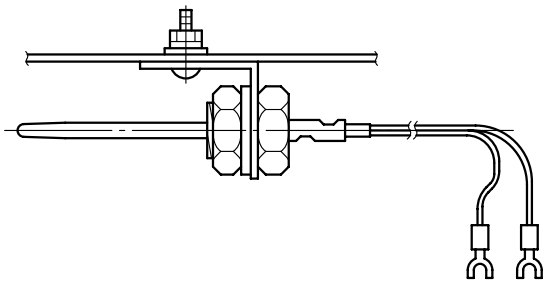

6) Two thermistor heat detectors (DTA-2) can be added (operating only in OR mode). Additional thermistor heat detectors (DTA-2) are optional.
7) Signal converters (TTA-2, including DTA-2) required when more than three thermistor heat detector or two detectors operating in AND mode are installed, are optional.
Up to four signal converters can be installed so you may have up to a maximum of six thermistor heat detectors.

5. Copper Pipe Arrangement

1. Piping

1) The copper pipe that is included (JIS H3300, external diameter: 8mm, internal diameter: 6mm) should be used.
2) The distance between the cabinet and the nozzle should be 8m or less.
3) Curves should be processed using tools such as a bender. Up to 8 curves are allowed.
4) Secure it with pipe bands provided.

* The copper pipe (JIS G 3454, STP G370 (Sch 80) should be used for types ACO-60B, 100B.

2. Connecting the Pipe to the Cabinet

1. ACO Type (CO_2) (except for ACO-60B and ACO-100B)

1) Connect the included elbow to the cabinet mounting bracket to determine the orientation.
2) Insert a cap nut and an entrenching ring into the copper pipe. Insert the pipe into the elbow and then tighten the cap nut to secure the pipe.
3) Tighten the nut to a torque value of 1080-1270N · cm. Otherwise tighten it manually until it cannot be turned smoothly and then turn it one and one-quarter to one-half turns again.

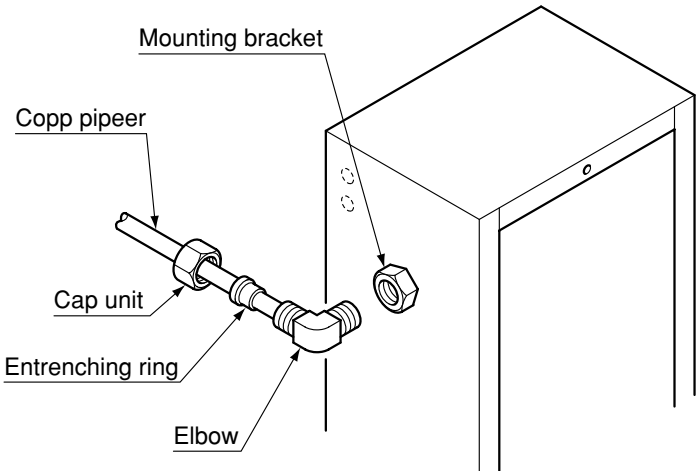

* Types ACO-60B, 100B have a piping port (1B) on the cabinet top surface.

2. AFF Type (Foam) and ADC Type (Dry Chemical)

1) Cut in the membrane affixed to the grommet on the cabinet to make a cross recess, and insert the pipe into it.
2) Insert a cap nut and a ring into the pipe and connect it to the mounting bracket on the container. Tighten the nut to secure the pipe.
3) Tighten the nut to a torque value of 1080-1270N · cm. Otherwise tighten it manually until it cannot be turned smoothly and then turn it one and one-quarter to one-half turns again.

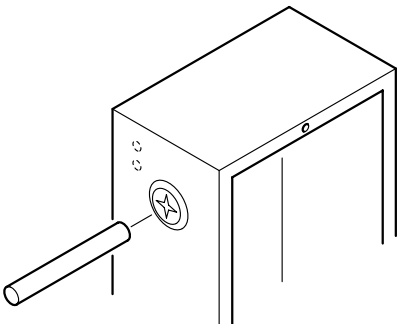

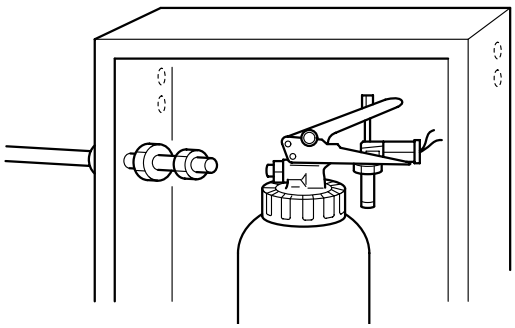

3. Branching

1) To make a branch use a tee for branching (see the figure below).

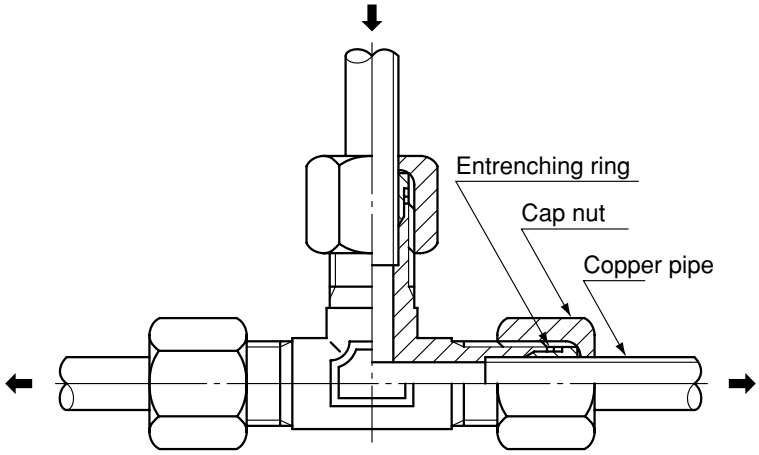

Tee (using entrenching rings)

2) When attaching two nozzles for the basic configuration, use one tee to create a tournament-shaped pipe arrangement.

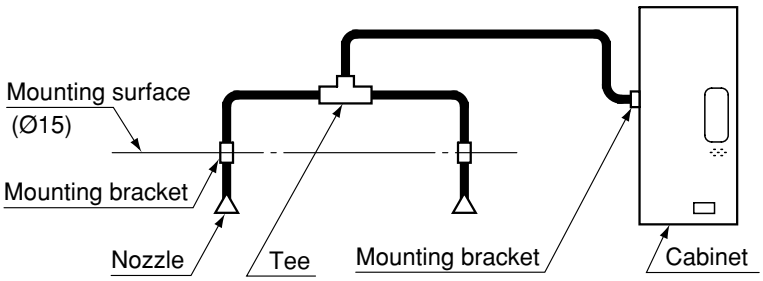

3) When attaching four nozzles for the AFF type, use three tees to create a tournament-shaped

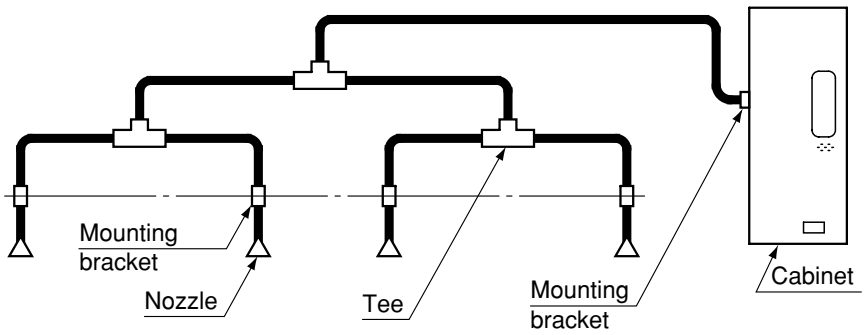

6. Wiring

1. Wiring

(1) Wiring the Detectors
Use electric cables of 0.5mm^2 (Conforming to Ministry of Home Affairs, No. 4 notified by its Fire Defense Agency, shielded heat resistant cables) or equivalent.

(2) Works for Primary Power Source, Primary Power Source
1) The primary power source can use either of AC100V and AC200V.
2) Please make it an exclusive power source from the breaker which can always supply primary power.
3) Route cables following the indoor wiring regulation.

(3) Wiring for Remote Alarming Devices
1) A number of terminals for remote alarming devices are equipped with the terminal block. Use them when you need to notify a fire remotely, halt machines, and so on.
2) The terminal for signal transfer is a contact of non-voltage in shipping. If b contact is required, please short-circuit between 2 and 3 of the jumper pins J3-J6 on the substrate. (Short-circuit between 1 and 2 for a contact) (See the page 42 for details)

2. Piping and Wiring

(1) Wiring should be protected by conduit tubes.
(2) To pull cables out of the cabinet use the knockout (Ø21).
(3) The power cord, which should be routed separately from other cables, has to use a dedicated opening.
(4) After wiring make sure that the grounding insulation resistance is measured before connecting cables to each device. Grounding resistance: more than 50Ω (using a 250V insulating resistance tester)

3.Connecting Terminals on the Control Panel

(1) Location of the Terminal Blocks

As shown below, there are two terminal blocks and one connector on the control panel.

1) Primary power source terminal stand (Types ACO-60B, 100B are not used)
2) Detector, remote control box and signal transfer box terminal stand
3) Connector for standby power (Types ACO-60B, 100B are alreaby wired to the DC power source)
4) Connector for starter (Types ACO-60B, 100B are not used)

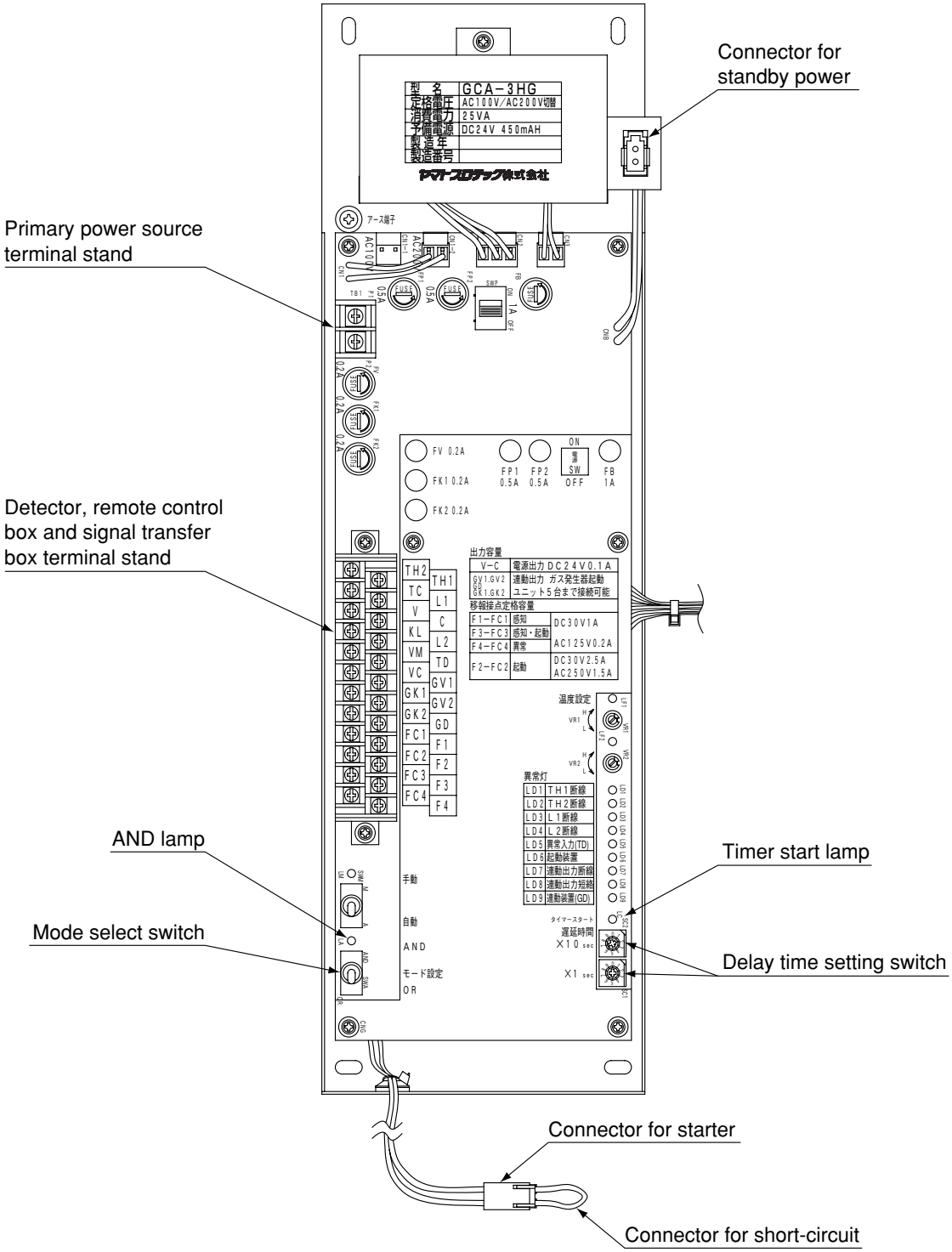

(2) Connecting Basic Devices

1) Connecting Thermistor Heat Detectors

- One thermistor heat detector should be connected to TH1-TC (Terminal Marking: TH1-TC) in basic configuration.
- Remove the termination resistor (51kΩ) shipped from the factory, which is attached to TH1-TC, before connecting cables for the thermistor heat detector.

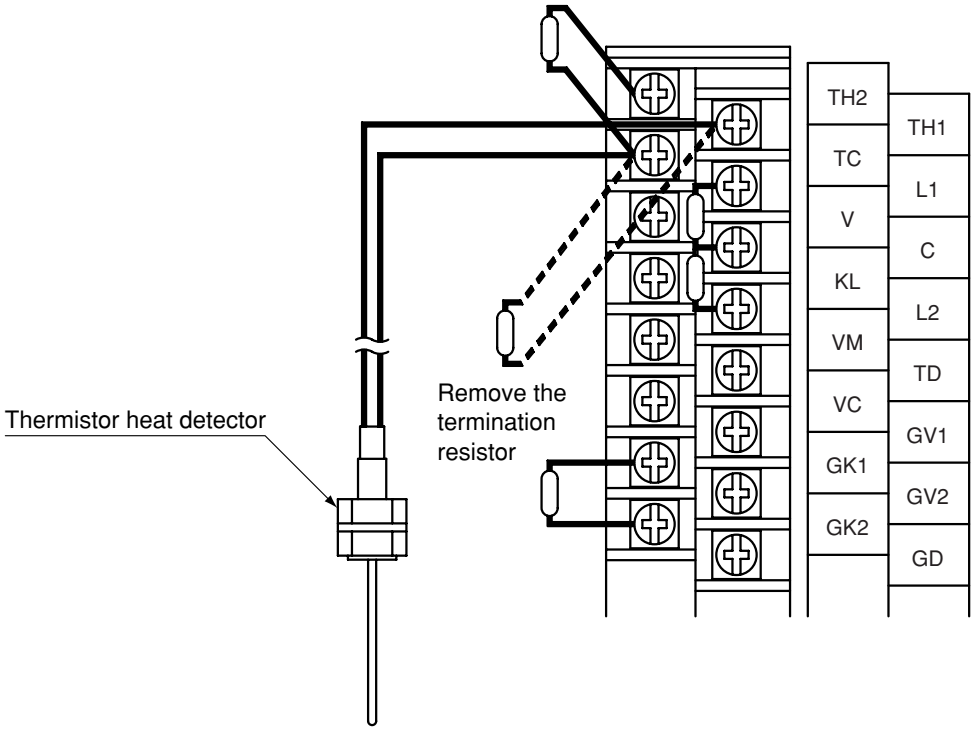

Note: You should not remove the termination resistors attached to the terminals (terminal marking TH2-TC, L1-C, L2- C and GK1-GK2) for the disconnection alarming circuit.

2) Connecting the Primary Power Source

- Either 100VAC or 200VAC are available. Depending on the input voltage, change the input voltage setting using the connector CN1.

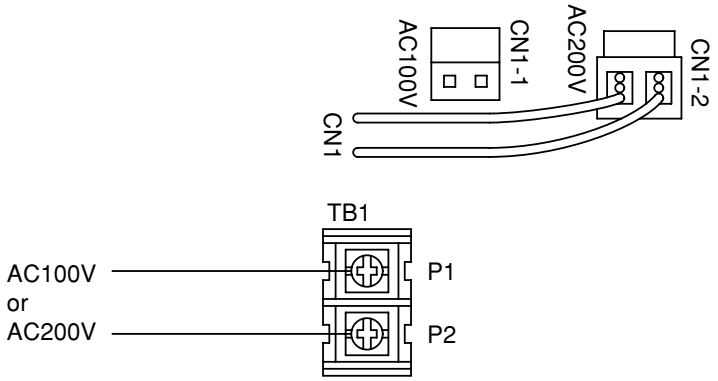

- The input voltage setting is AC200V (the connector CN1 is connected to the connector CN 1-2) at the time of shipment.
- When changing to AC100V input, insert the connector CN1 into the connector CN1-1 for AC100V.

* Types ACO-60B, 100B shall be connected to the terminal board separately mounted in the package as shown below

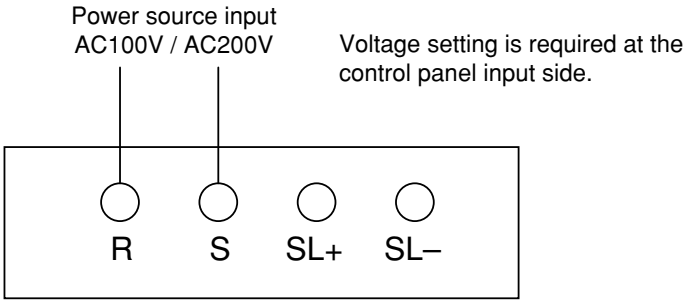

Terminal board separately mounted in the package

3) Connecting Remote Alarming Devices

Remote Alarming Type	Terminal Marking		Contact capacity	Description
Detection	F1 FC1	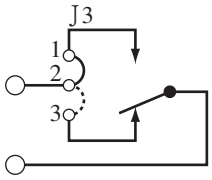	DC30V 1A AC125V 0.2A	Start when Thermistor Heat Detectors operate or the MANUAL START button is depressed.
Start	F2 FC2	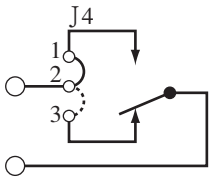	DC30V 2.5A AC250V 1.5A	Same as above
Detection and Start	F3 FC3	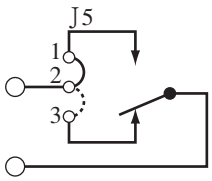	DC30V 1A AC125V 0.2A	Switching to detection signal transfer or start signal transfer is enabled by the jumper pin J2.
Anomaly	F4 FC4	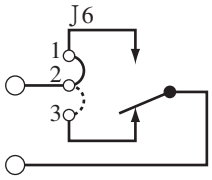	DC30V 1A AC125V 0.2A	Start when the specified condition holds by operation of detectors or MANUAL START button.

* The jumper pins J3-J6 are short-circuited between 1 and 2 (non-voltage a contact) at the time of shipment. When changing to non-voltage b contact, the jumper pin is short-circuited between 2 and 3.
* Detection / start signal transfer (F3-FC3) is detection signal transfer (short-circuit between 1 and 2 of the jumper pin J2) at the time of shipment. When changing to start signal transfer, the jumper pin J2 is short-circuited between 2 and 3.
* Abnormal signal transfer (F4-FC4) is POWER OFF or Black out actuation (short-circuit between 1 and 2 of the jumper pin J1) at the time of shipment. When actuating abnormal signal transfer due to disconnection or other anomalies, the jumper pin J1 is short-circuited between 2 and 3.
* The procedure for changing a jumper pin.
    I. Turn OFF the power switch.
    II. Remove the control part cover fixed with four screws.
    III. Change the jumper pin.
    (Insert the pin to the end)
    IV. After checking the change, fix the control part cover with four screws.

4) Connecting Starter

- Refer to the “8. Testing and Setting” section for connecting the starter.
- The starter (gas generator) should be connected to the connector for the starter after the actuation is checked.

Note: The connector for the starter is attached with a connector for short-circuit.
Do not remove it until you connect the starter. If it is removed, the POWER lamp will blink and the alarming buzzer will intermittently sound. Since the connector for short-circuit is required at the time of inspection, it should be stored.

* Types ACO-60B, 100B shall be connected to the terminal board separately mounted in the package as shown below.

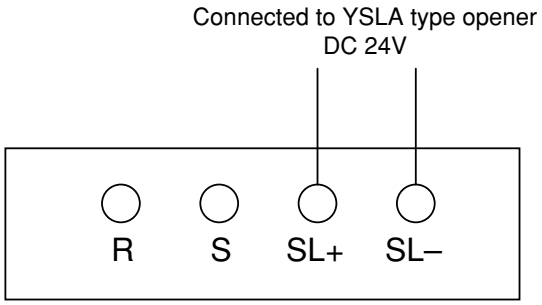

Terminal board separately mounted in the package

(2) Connecting Optional Devices

1) When installing and using two thermistor heat detectors.

- Connect the thermistor heat detector (optional) to TH2-TC (terminal marking TH2-TC).
- Remove the termination resistor (51kΩ) shipped from the factory, which is attached to TH2-TC2, before connecting cables for the thermistor heat detector.

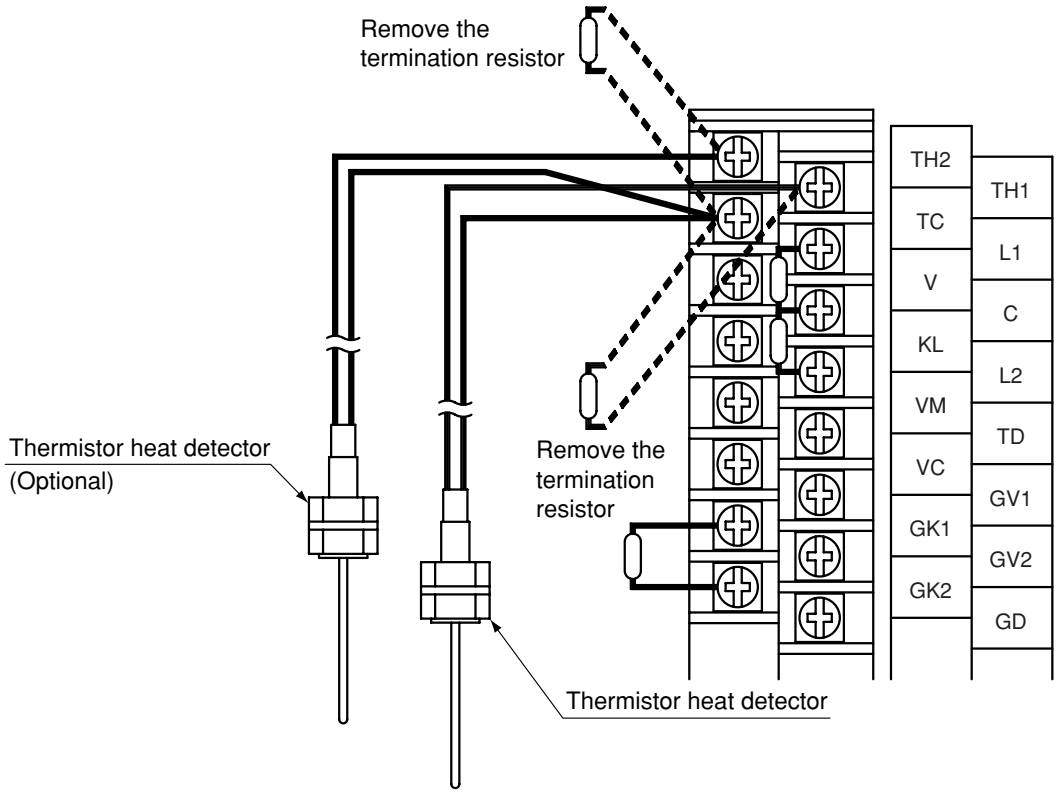

Note: Two thermistor heat detectors connected to TH1-TC and TH2-TC operate in OR mode. If the mode select switch is set to the AND side, AND operation is not enabled.

2) When installing and using more than three thermistor heat detectors.
- Connect additional signal converters (TTA-2, optional).
- Up to four additional signal converters are available. (Parallel connection)
- Remove the termination resistor (10kΩ) attached to the terminals (L1-C).
  When installing an additional thermistor heat detector, refer to the figure below for connecting a signal converter to the terminal block.
- Two heat detectors connected to L1 (terminal marking L1-C) and TH1-TC (terminal marking TH1-TC) or TH2-TC (terminal marking TH2-TC) can operate in AND mode, if the mode select switch is set to the AND side.

Note: A termination resistor (10kΩ) is built in the signal converter (TTA-2). When connecting two or more pieces, one piece should be a type with a built-in termination resistor, and the others should be a type without it.

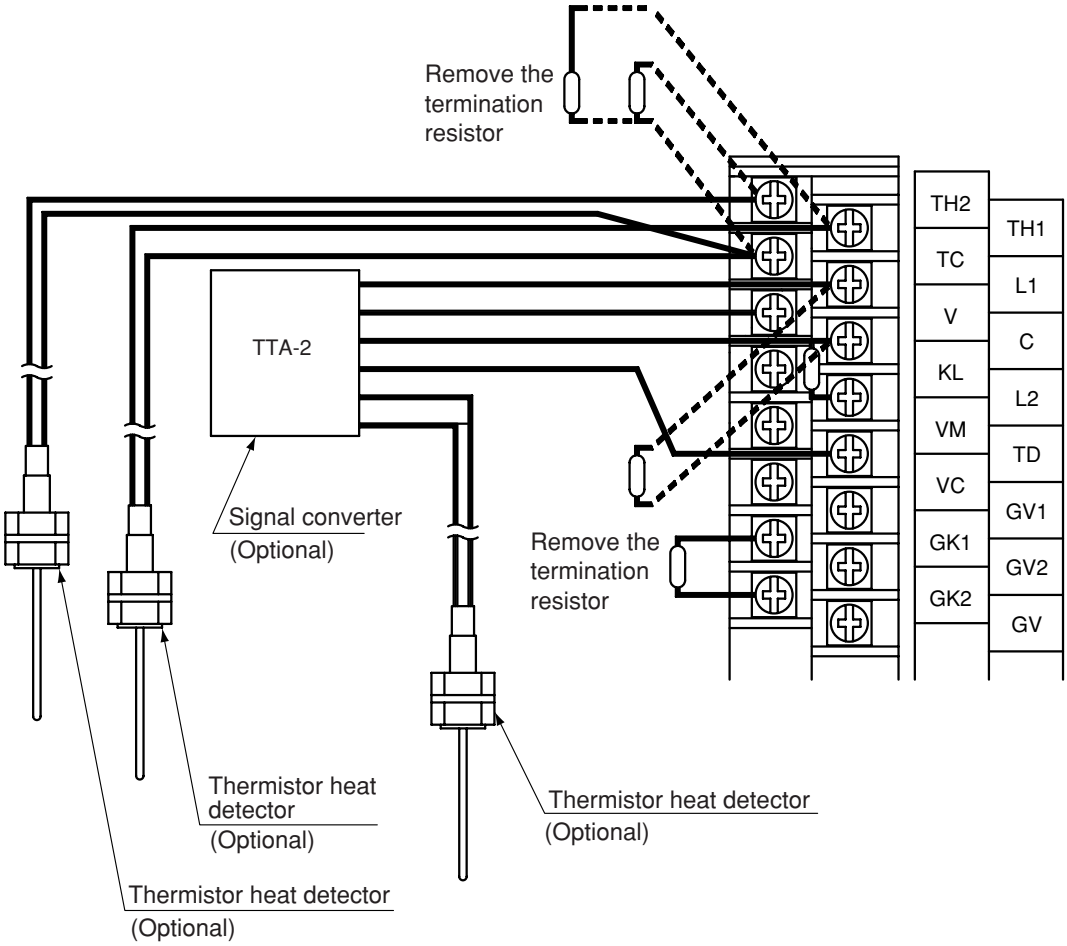

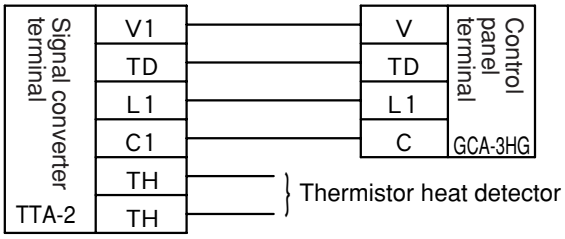

3) When installing a heat detector and a fixed temperature spot type detector (optional), a smoke detector (optional), a flame detector (optional) and using it in OR or AND mode.
   - The fixed temperature spot type detector or the smoke detector should be connected to the L1 (terminal marking L1-C1). Up to four devices can be attached for each detector type.
   - The smoke detector (FRV type) should be connected to the L1-C-V (terminal marking L1-C-V). Up to one device can be attached for detector type.
   - Remove the termination resistor (10kΩ) attached to L1-C. The termination resistor (10kΩ) provided should be connected to the terminations of the fixed temperature spot type detector or the smoke detector.
   - Remove the termination resistor attached between the terminals L1 and C1 before connecting the flame detector (FRV type) to the terminals L1-C-V. (Refer to the instructions manual of the flame detector (FRV type) for the connection method.) Since the flame detector (FRV type) contains a termination resistor, it does not require resistance at the end of wiring.

Note: When connecting the fixed temperature spot type detector or the smoke detector and the flame detector (FRV type), do not attach resistance at the end of wiring because the flame detector (FRV type) contains a termination resistor.

Note: Without a termination resistor, the POWER lamp will turn on and the alarming buzzer will sound intermittently. The thermistor heat detector, however, does not require a termination resistor since it is a resistive element. (If attached, the operating temperature will differ from the setting.)

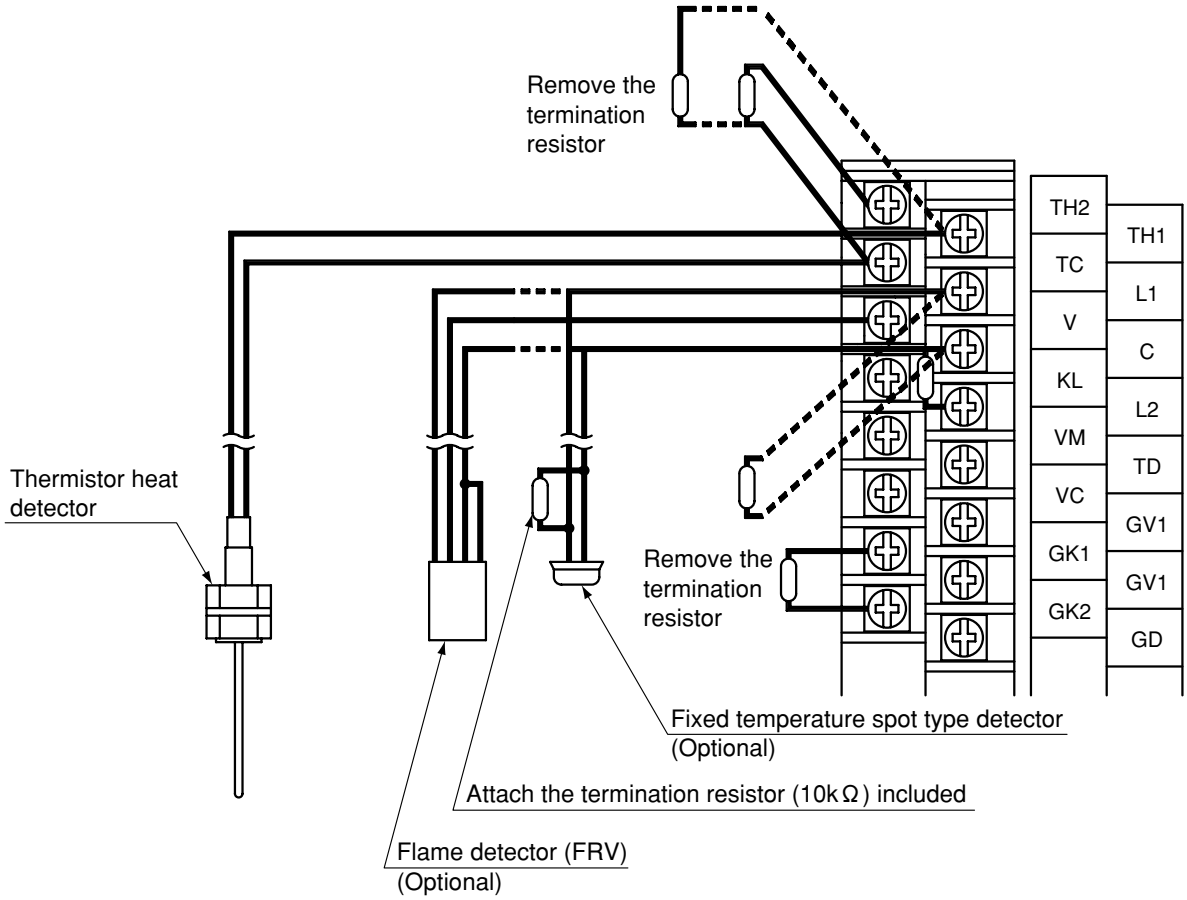

4) Connection of remote control box

- Connect the remote control box (RC-3, optional) to the terminals V-L2-C.
- Up to four remote control boxes can be connected. (Parallel connection)
- Remove the termination resistor (10kΩ) attached between terminals L2 and C, and connect the remote control box to control panel terminal stand as shown in the following figure.

Note: A termination resistor (10kΩ) is built in the remote control box (RC-3). When connecting two or more pieces, one piece should be a type with a built-in termination resistor, and the others should be a type without it.

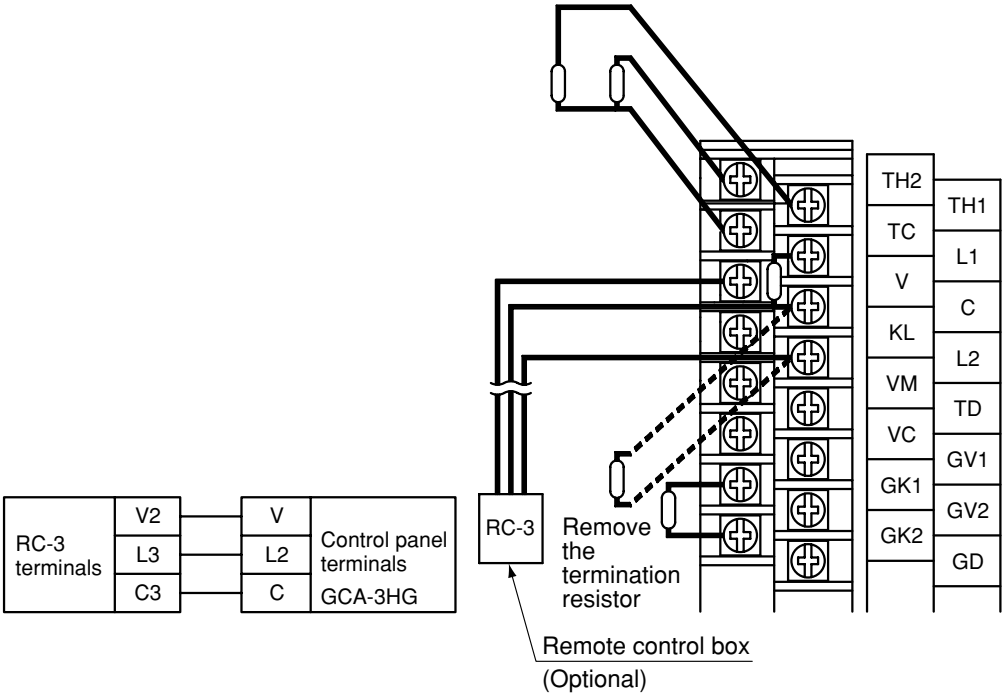

5) Connection of remote AUTO / MANUAL switching

- Connect contacts, such as a switch, to the terminals VM-VC.
- When the AUTO / MANUAL switch of the control panel is in AUTO, it will be changed to MANUAL by short-circuiting the terminals VM-VC. (The MANUAL lamp on the control panel turns ON.) If they are open-circuited, the switch will be changed to AUTO.

Note: If the thermistor heat detector or the sensor runs after the switch is changed to MANUAL, it cannot be changed to AUTO.

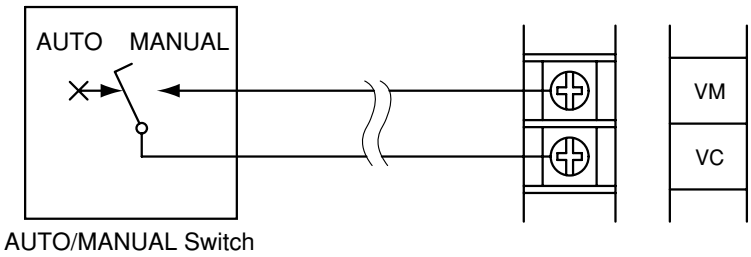

6) In the case of discharging two or more sets of extinguishing agent simultaneously
- Connect the gas generator starting unit (MC-K, optional).
- Up to five gas generator starting units can be connected.
- Remove the termination resistor (10kΩ) attached between the terminals GK1 and GK2, connect the wiring for gas generator starting units as shown in the following figure, and attach the accompanying 10kΩ resistance to the end of GK1-GK2 wiring.

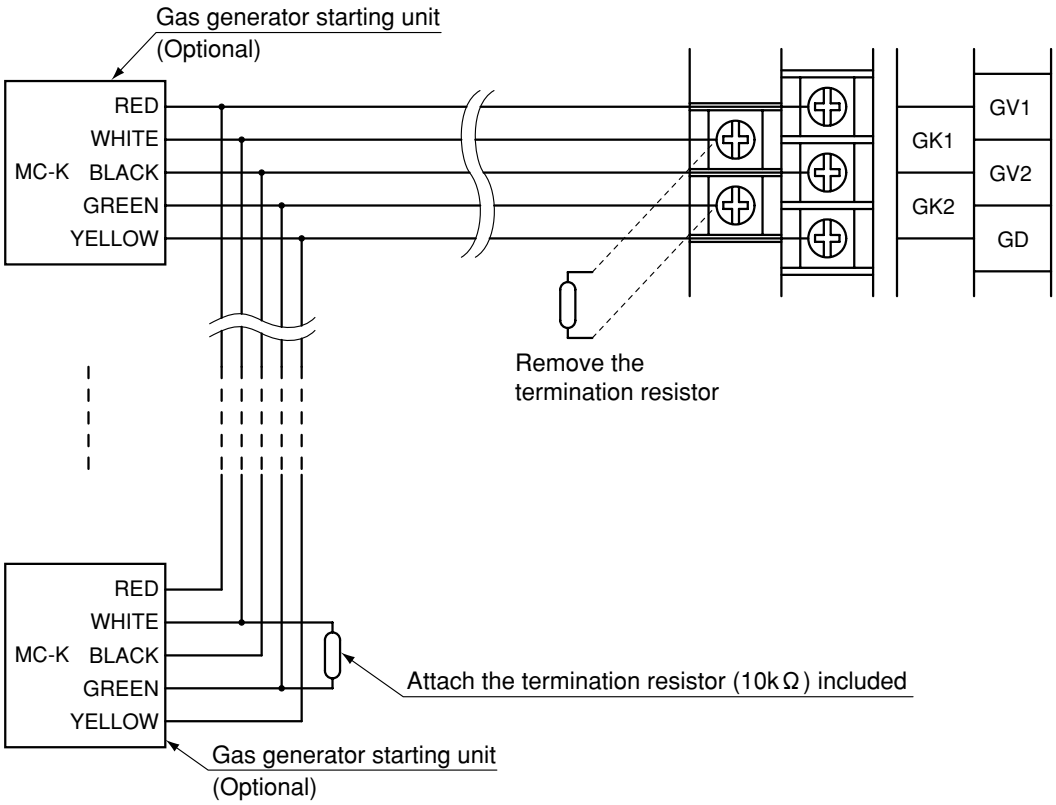

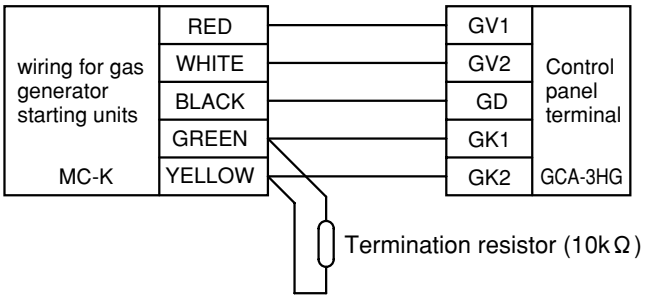

4. Connecting a Standby Power Source

Securely fix the standby power source on the sheet metal cover of the upper part of the control panel with the exclusive brackets and insert it into the connector for standby power (the upper part of the control panel). The standby power source has capacity enough to run for 10 minutes after this equipment continues monitoring for one hour at the time of power failure.

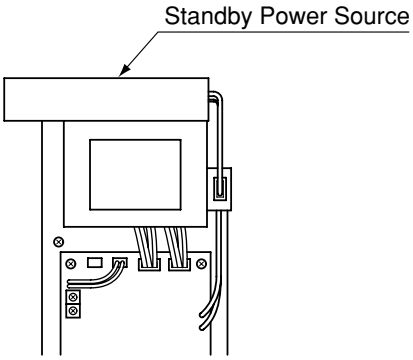

Note: This control panel contains a circuit where if the voltage of the standby power source drops to less than 12V during operation using the standby power, the standby power input is cut off and the power is completely turned off for protection of operation. In the event that this circuit runs, stopping the operation of the control panel, it will return to normal by supplying primary power. Therefore, even if the power switch is turned on with the primary power source not connected but with only the standby power source connected, the control panel does not operate.

• Standby power source

1) Although the life of a standby power source is three to five years in the normal use conditions, it is greatly influenced by the installation environment, the use state or other conditions. When anomalies, such as reduced capacity, liquid leak or rusting, are found, prompt replacement is needed.
2) A standby power source must be periodically replaced because reduced capacity or the like advances even if there are no anomalies in appearance.
3) Please do not discard a used standby power source, but contact its sales office or manufacturer.

* Types ACO-60B, 100B have an integrated spare DC power source unit.

7. Setting Control Panel Switches

1. Location of Switches

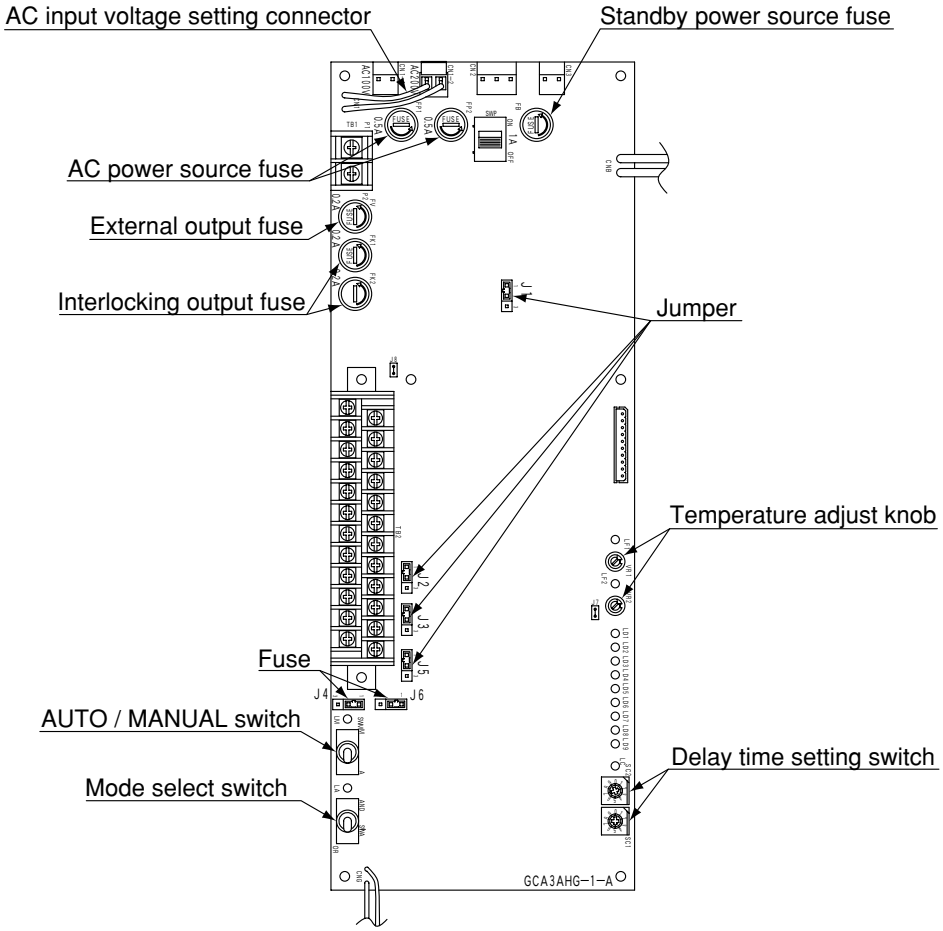

The state of the switch jumper etc. at the time of shipment

AC input voltage setting connector CN1	It is set to AC200V input.
AC power source fuses FP1, FP2	250V 0.5A (glass pipe Ø5.2 × 20mm)
Standby power source fuse FB	125V 1A (glass pipe Ø5.2 × 20mm)
External output fuse FV Interlocking output fuse FK1, FK2	125V 0.2A (glass pipe Ø5.2 × 20mm)
Temperature adjust knob VR1, VR2	The operating temperature of the thermistor heat detector is set to approx. 120˚C.
AUTO / MANUAL switch	It is set to the AUTO side.
Jumpers J1-J6	It is set to 1-2 ON.
Mode select switch	It is set to the OR side.
Delay time setting switch	It is set to 0 seconds.

2. Setting Primary Power Voltage

When the primary power voltage is AC100V, it should be changed based on “6. Wiring 3 (2) 2) Connecting the Primary Power Source”

3. Setting the Operating Temperature of Thermistor Heat Detector

When changing the operating temperature of the thermistor heat detector, determine the resistance based on the operating temperature (setting temperature) from Table 1. Setting Temperature-Resistance Conversion chart, adjust the variable resistor etc. in agreement with the resistance determined by the tester, and change the operating temperature as shown in the following procedure.

Turn the POWER switch off.

↓

Remove the resistor attached to TH1-TC (TH2-TC), which is shipped at the factory (51kΩ), and then insert a variable resistor etc.

↓

Turn on the POWER switch.

↓

Slowly turn the TEMP. ADJ. (temperature adjustment) VR1 (VR2) clockwise (to the H position) using a flat-blade screwdriver.

↓

As soon as the temperature adjust knob LF1 (LF2) is illuminated, the VR1 (VR2) has been set.
Note: The start lamp will illuminate and the alarming buzzer will sound after a few seconds.

↓

Turn the POWER switch off.

↓

Remove the variable resistor etc. from the terminals TH1-TC1 (TH2-TC2), and connect the thermistor heat detector.

↓

Setting change of operating temperature is completed.

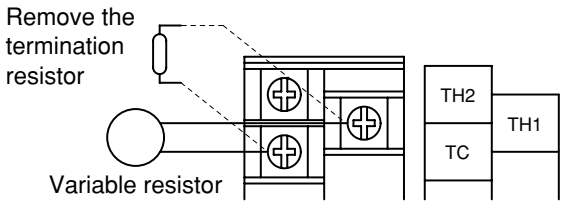

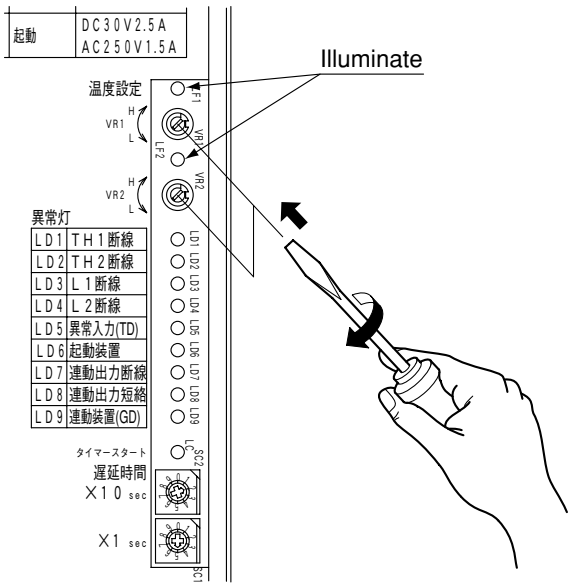

Setting Temperature – Resistance Conversion Chart

Setting Temperature (°C)	60	65	70	75	80	85	90	95	100	105	110	115	120
Resistance Converion (kΩ)	12.3	10.3	8.7	7.3	6.2	5.3	4.7	3.9	3.3	2.9	2.5	2.2	1.9

* If the temperature adjust knob VR1 (VR2) is completely turned to the L side (counterclockwise), the temperature is set to approx. 60°C
* Please prepare variable resister etc.

4. AUTO / MANUAL Switching

- If the AUTO / MANUAL switch is set to “AUTO” or “MANUAL”, automatic monitoring state or manual monitoring state will be obtained respectively. Moreover, when the AUTO / MANUAL switch is in “AUTO”, manual monitoring state is enabled by short-circuiting the remote AUTO / MANUAL switching input (terminals VM-VC).
- During monitoring state, the MANUAL lamp on the control panel is ON. Then if the thermistor heat detector or other fire detector runs, the start lamp will blink and the alarming buzzer will sound intermittently, but the extinguishing agent will be not discharged.
- When the thermistor heat detector or other fire detector runs in the state of manual monitoring, manual monitoring state is retained and automatic monitoring state is not enabled by changing the AUTO / MANUAL switch to “AUTO” or opening the remote AUTO / MANUAL switching input. If the POWER switch is turned OFF, the retention will be canceled.

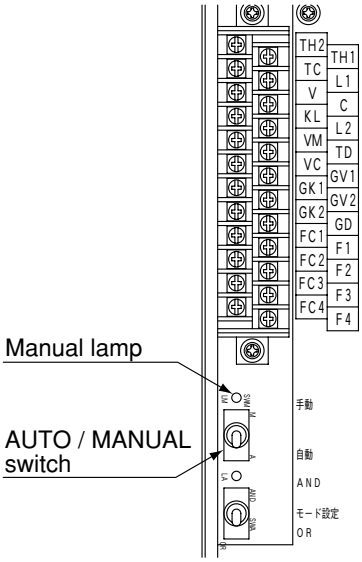

5. Jumper Setting

Jumper Explanation Table

J1	Selection of object for abnormal signal transfer	1-2 ON	POWER OFF or output at the time of power failure
		2-3 ON	POWER OFF or output at the time of power failure and at the time of disconnection or other anomalies
J2	Selection of detection / start for detection / start signal transfer	1-2 ON	The same as detection signal transfer
		2-3 ON	The same as start signal transfer
J3	Selection of a contact / b contact for detection signal transfer	1-2 ON	a contact
		2-3 ON	b contact
J4	Selection of a contact / b contact for start signal transfer	1-2 ON	a contact
		2-3 ON	b contact
J5	Selection of a contact / b contact for detection / start signal transfer	1-2 ON	a contact
		2-3 ON	b contact
J6	Selection of a contact / b contact for abnormal signal transfer	1-2 ON	a contact
		2-3 ON	b contact

6. Mode Selection

The control panel with the optional mode select switch can be used in AND operation in connection to the thermistor heat detector (terminals TH1-TC or TH2-TC) and other fire detector (terminal L1-C1) by setting the mode select switch to "AND.

OR mode: The starting conditions will be satisfied if the thermistor heat detector or other fire detector is actuated.

AND mode: The starting conditions will be satisfied if both the thermistor heat detector and other fire detector are actuated.

- When either the thermistor heat detector or other fire detector runs under the AND setting (the AND lamp on the control panel turns on), the start lamp blinks and the alarming buzzer sounds intermittently. In this case, since the AND setting is retained, changing the mode select switch to “OR” will not lead to OR operation. If the power switch is turned OFF, the retention will be canceled.

When both the thermistor heat detector and other fire detector run and the starting conditions are satisfied causing the extinguishing agent to be discharged, the start lamp turns on and the alarming buzzer sounds continuously.

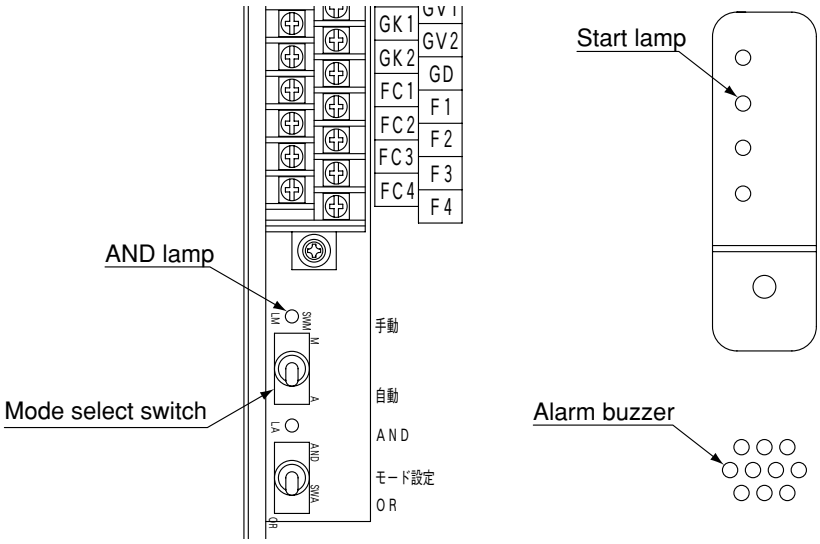

7. Delay Timer

- When the starting conditions, such as the actuation of the thermistor heat detector and / or other fire detector or pressing of the MANUAL START button, are satisfied in the case of the control panel with the optional delay time setting switch, the delay timer runs and the extinguishing agent is discharged after the period specified by the delay time setting switch.
- When the starting conditions, such as the actuation of the thermistor heat detector and / or other fire detector or pressing of the MANUAL START button, are satisfied, the timer start lamp blinks, the alarming buzzer intermittently sounds, the start lamp on the control panel is ON and the delay timer runs. After the setting time, the start lamp turns ON, the alarming buzzer sounds continuously and the extinguishing agent is discharged.
- The delay time setting switch can set the period to a maximum of 99 seconds ranging from the first digit to the second digit.

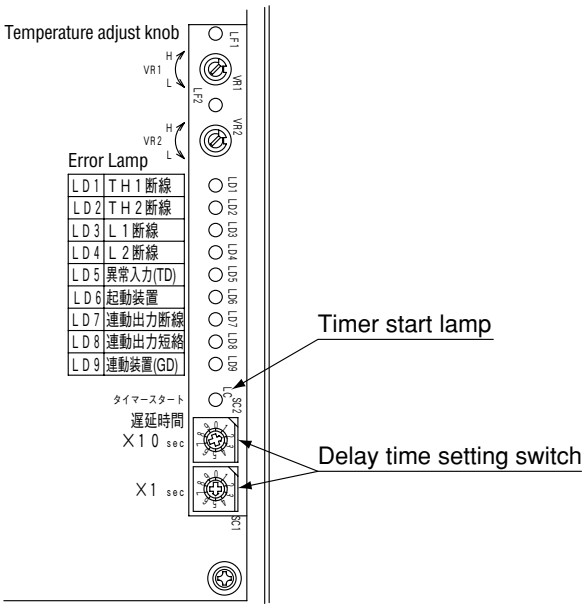

8. Testing and Setting

1. Test Preparation

As the AFF-6B type fire extinguishing devices have no starting setting pin, follow the test preparation procedure from Item 2) onward.

(1) Keep the starting setting-pin at the “pre-setting” position until the testing is completed.

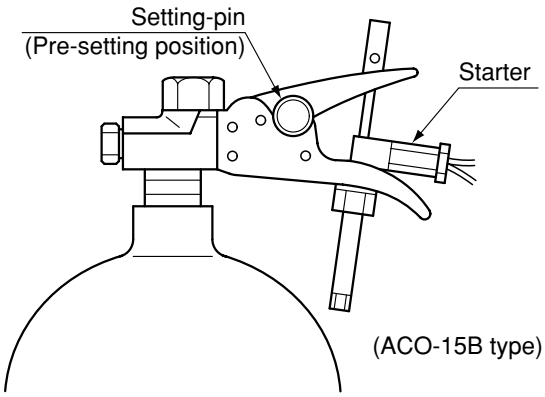

*For Types ACO-60B, 100B, YSLA type opener should not be mounted to container.

(2) You should not connect the cables for the starter to the terminals for the starter on the control panel.

(3) The connector for the starter is attached with a connector for short-circuit. Do not remove it until the test is completed and the connector for the starter is connected. If it is removed, the POWER lamp will blink and the alarming buzzer will intermittently sound.

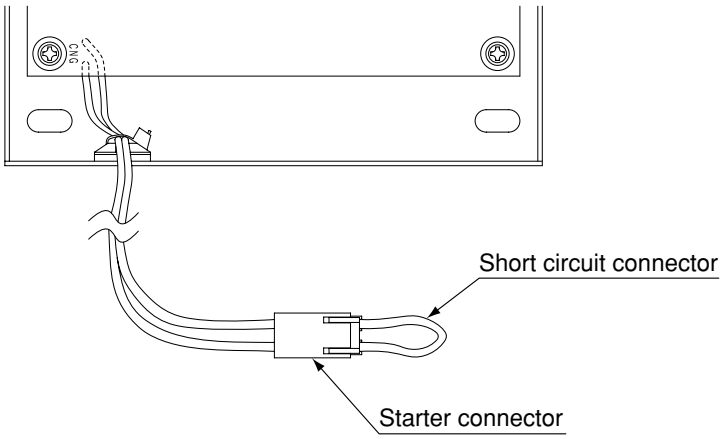

(4) Ensure that each cable is connected to appropriate terminal and the cable for the starter is disconnected.

2. Testing

(1) Testing in Auto Mode

1) When the mode select switch is set to the OR side

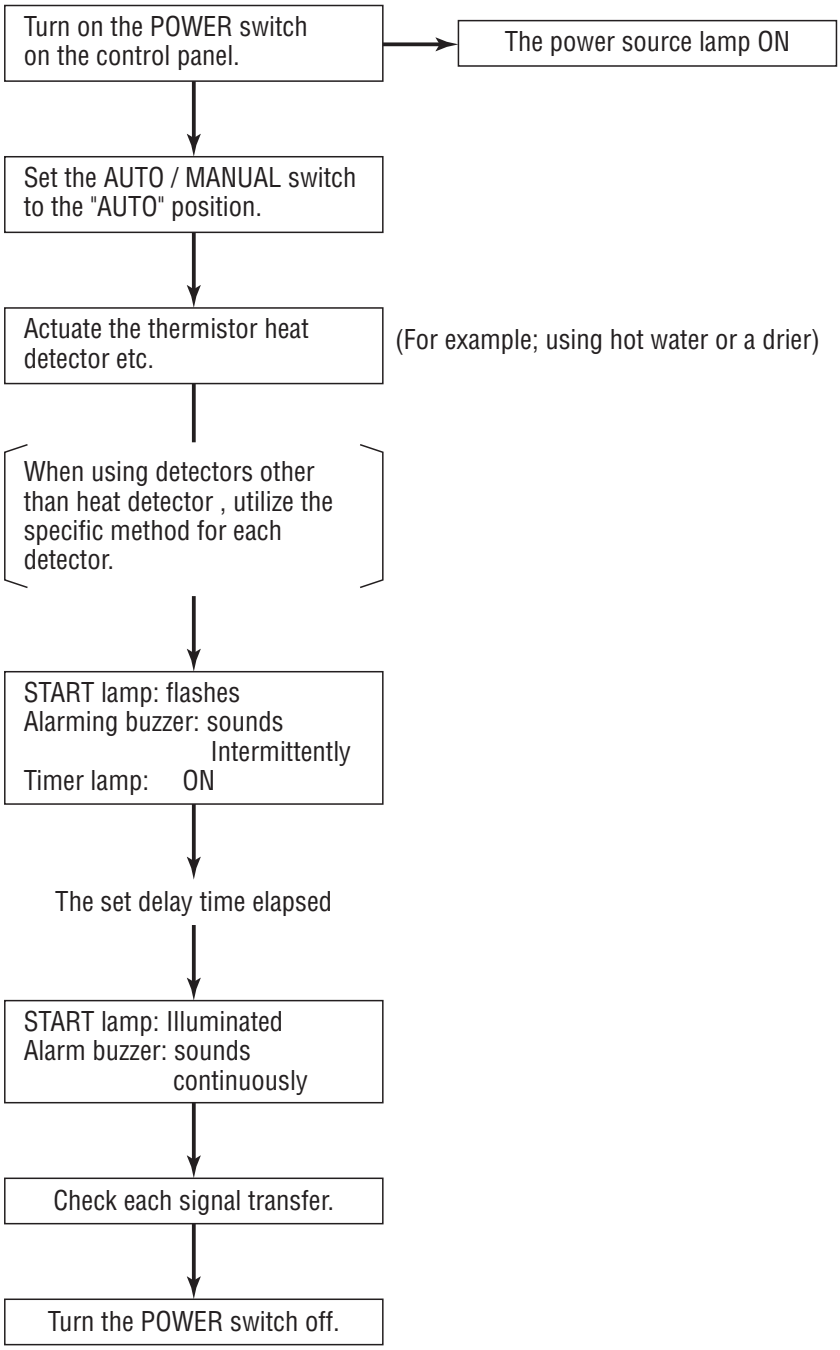

2) When the mode select switch is set to the AND side

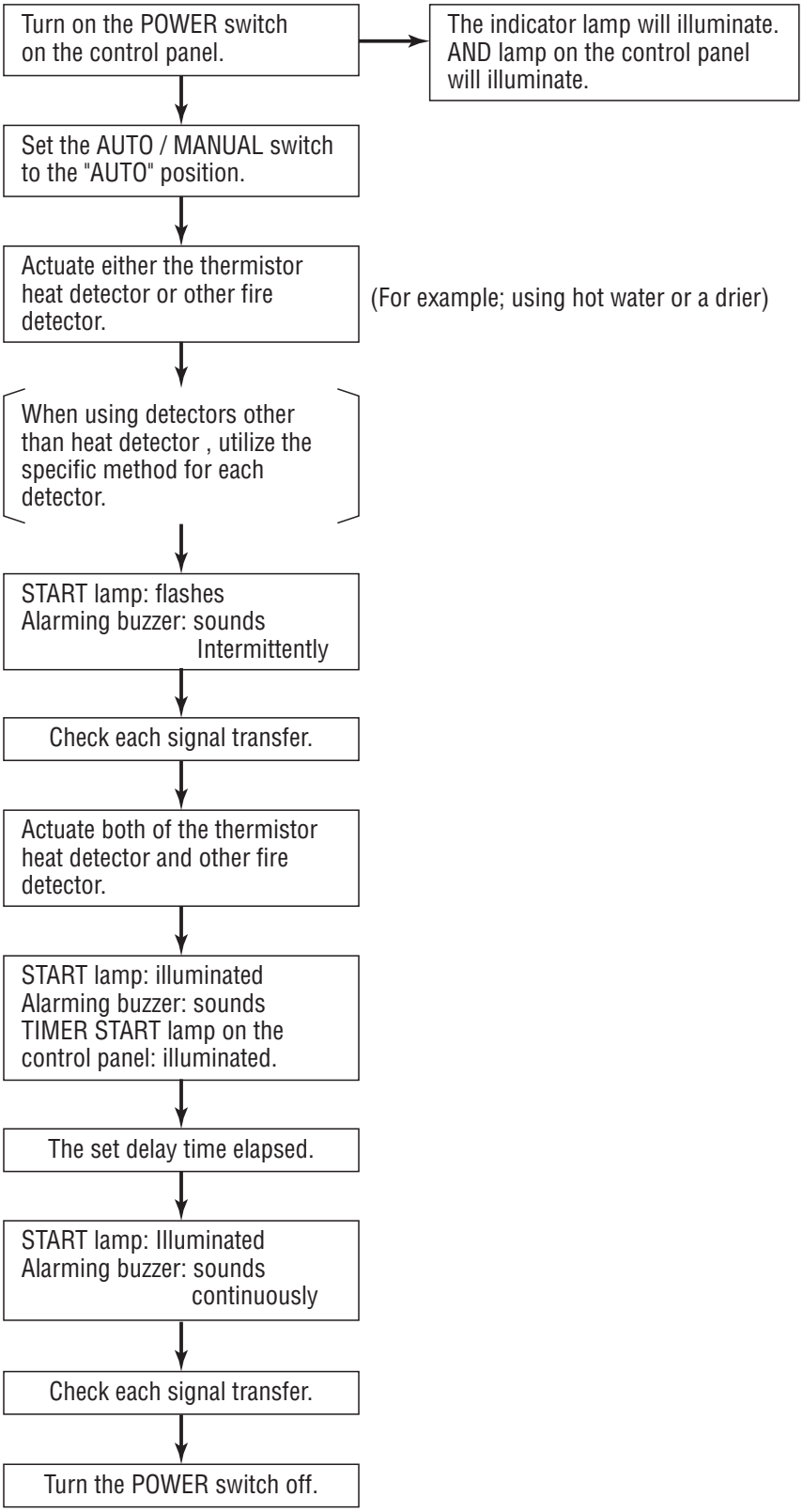

(2) Testing in Manual Mode

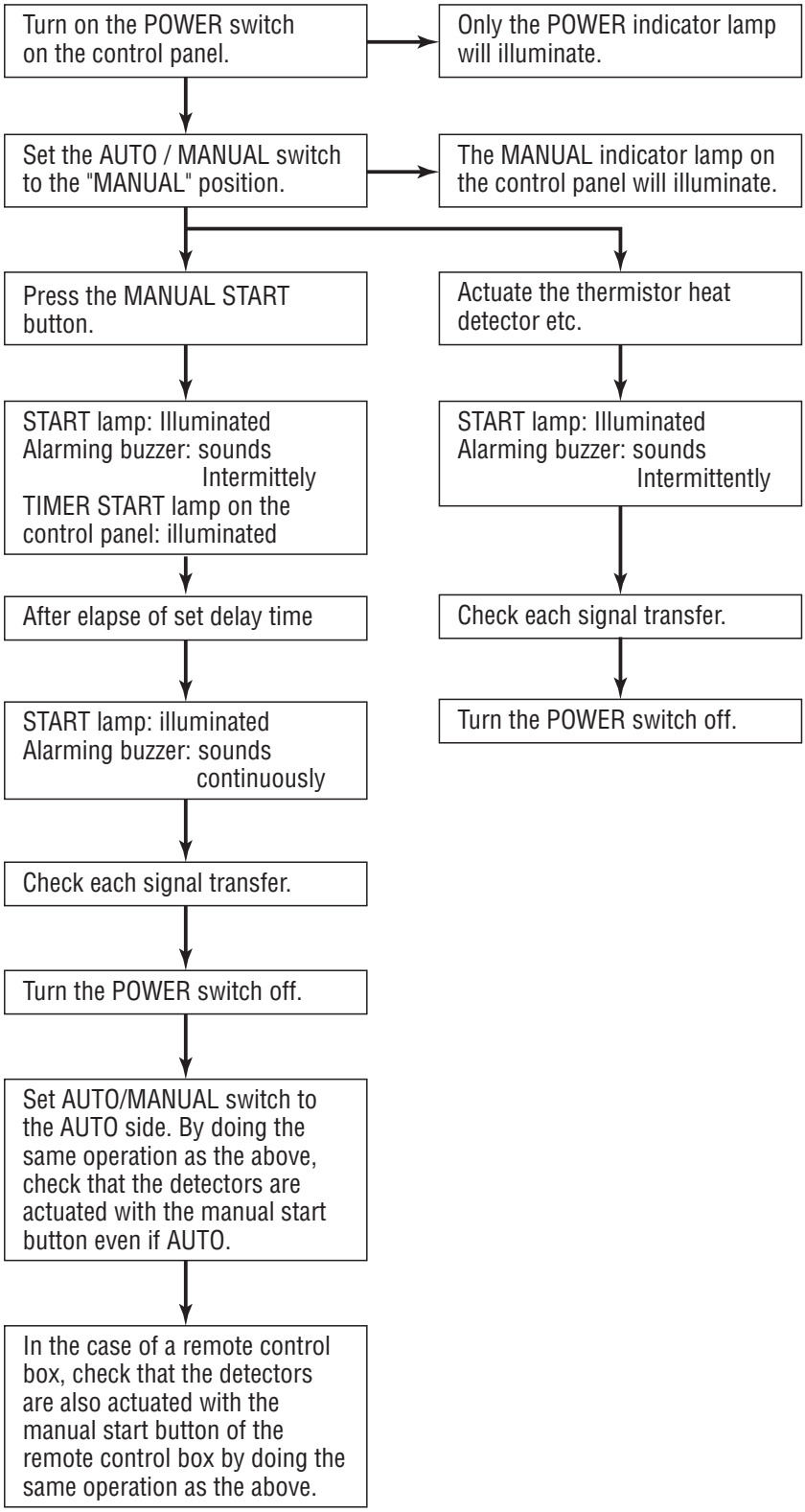

(3) Test of disconnection alarming

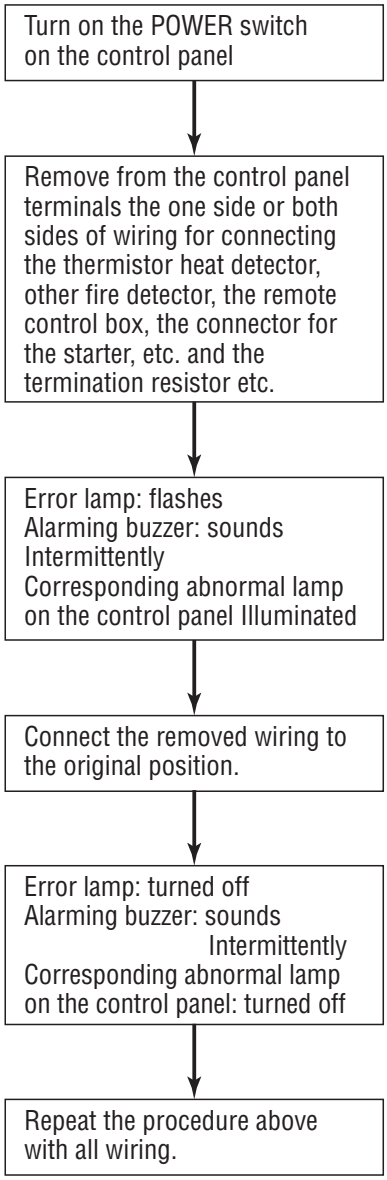

3. Setting

After completion of the test in Item 2) above:

Keep the setting-pin at the pre-setting position.

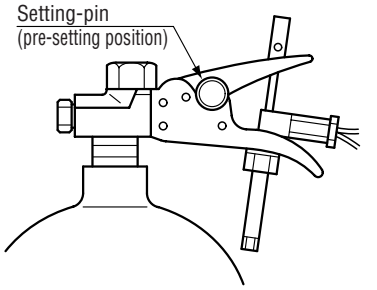

* For types ACO-60B, 100B, mount YSLA type opener to container. Don't withdraw the lock-pin keeper.

↓

Turn on the POWER switch on the control panel. → Ensure that the POWER indicator lamp turns on.

↓

Ensure that the START indicator lamp turn off and the Alarming buzzer does not sound.

↓

Remove the short circuit connector attached to the starter connector. Ensure that the POWER indicator lamp flashes and alarming buzzer sounds intermittently

Keep the short circuit connector removed since it will be required during inspection

↓

Connect the starter terminals to the starter connector.

↓

Ensure that the POWER indicator lamp turn on and the Alarming buzzer does not sound.

↓

Remove the setting-pin by turning it counterclockwise.

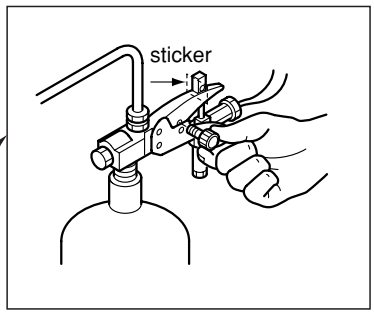

↓

Remove the sticker on the upper side of the starting shaft, and slowly insert the setting-pin by turning it clockwise.

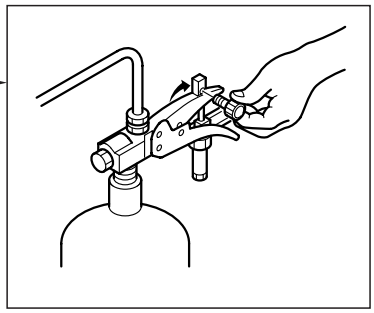

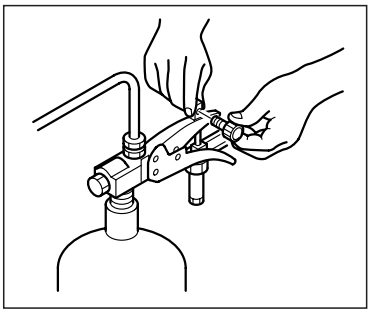

↓

Close the outside cap.

↓

This completes the setting.

Note: When inserting the setting-pin, if the starting shaft is lowered, lift it so that the hole locates over the lever. The lever should not be pressed down by force during this process.* For types ACO-60B, 100B, withdraw the lock-pin keeper and mount at the keeping hole.

3. Setting (AFF-6B type)

After completion of the test in Item 2) above:

Since the AFF-6B type fire extinguishing devices have no setting pin, setting pin replacement is not required.

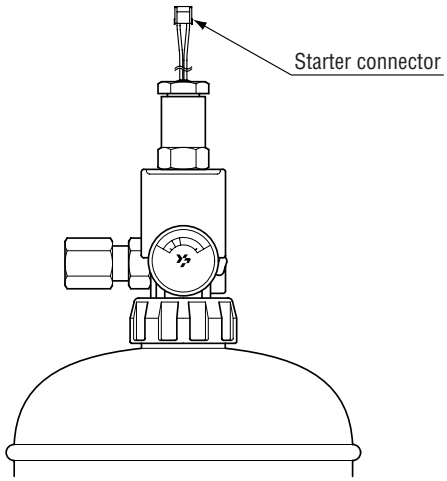

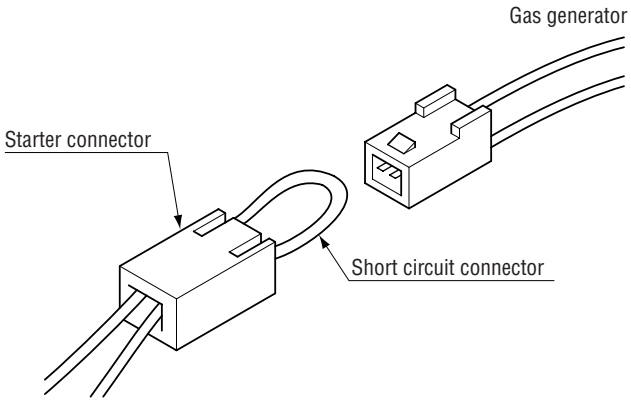

Turn on the POWER switch on the control panel. → Ensure that the POWER indicator lamp turns on.

↓

Ensure that the START indicator lamp turns off and the Alarming buzzer does not sound.

↓

Remove the short circuit connector attached to the starter connector. Ensure that the ERROR lamp flashes and the Alarming buzzer intermittently sounds.

(Note: Keep the short circuit connector removed since it will be required during inspection)

↓

Connect the starter to the starter connector.

↓

Ensure that the ERROR lamp turns off and the Alarming buzzer intermittent sounding stops.

↓

Completed

9. Check Sheet

■ Check procedure at the time of installation

(Enter ◯ or ×)

Check item	Installation contractor	End user
1. Check after execution		
a) Is the installation and fixation of the main body and each device completed?		
b) Is the execution of piping, wiring, etc. completed?		
2. Check before operation test		
a) Is the setting pin attached to the pre-setting position?		
b) Isn't the gas generator connected with the control panel?		
c) YSLA type opener not mounted? (In case of types ACO-60B, 100B)		
3, Check at the time of automatic testing operation		
a) Testing in auto mode		
(1) Warm the detector using a drier.		
(2) Does the alarming buzzer sound?		
(3) Is the signal transfer output normal? (Is the power cut off, the interlocking machine stopped, or the signal transferred?)		
(4) Turn "OFF" the power supply and restore the control panel. Is it all restored?		
4. Check of the manual test		
a) Press the start button.		
(1) Does the alarming buzzer sound?		
(2) Is the signal transfer output normal? (Is the power cut off, the interlocking machine stopped, or the signal transferred?)		
(3) Turn "OFF" the power supply and restore the control panel. Is it all restored?		
5. Test and check of the remote starter		
a) Press the start button.		
(1) Does the alarm buzzer sound?		
(2) Is the signal transfer output normal? (Is the power cut off, the interlocking machine stopped, or the signal transferred?)		
(3) Turn "OFF" the power supply and restore the control panel. Is it all restored?		
Date inspected	. .	. .
Fire extinguishing device serial number	Customer's signature	

Inspection

1. Pre-inspection Procedure ····· 63
2. Visual and Functional Inspection (conducted every six months) ···· 64
3. Comprehensive Inspection (conducted every year) ····· 65
4. Replacement Parts ····· 66
5. Replacing the Gas Generator ····· 66 - 69
6. Replacing the Extinguishing Agent ····· 70 - 72
7. Cleaning the Copper Pipes ····· 73
8. Replacing the Nozzle cover ····· 73
9. Care after Replacement and Use ····· 73

***For ACO-60B and ACO-100B, please read other instruction manuals.**

1. Pre-inspection Procedure

Make sure to perform the following procedure before inspection.

As the AFF-6B type fire extinguishing devices have no starting setting pin, follow the preparation work from Item 2) onward.

(1) Take off the outer cap from the housing, unscrew the setting pin (turn counterclockwise), remove it from the setting position, then screw it (turn clockwise) into the pre-setting position.

Note: Ensure that the upper lever does not lower when the setting pin has been removed.

* For types ACO-60B, 100B, unscrew the lock-pin keeper of YSLA type opener from the keeping hole (turn counterclockwise), then screw it (turn clockwise) into the center of the side of opener (nameplate side) (turn clockwise).

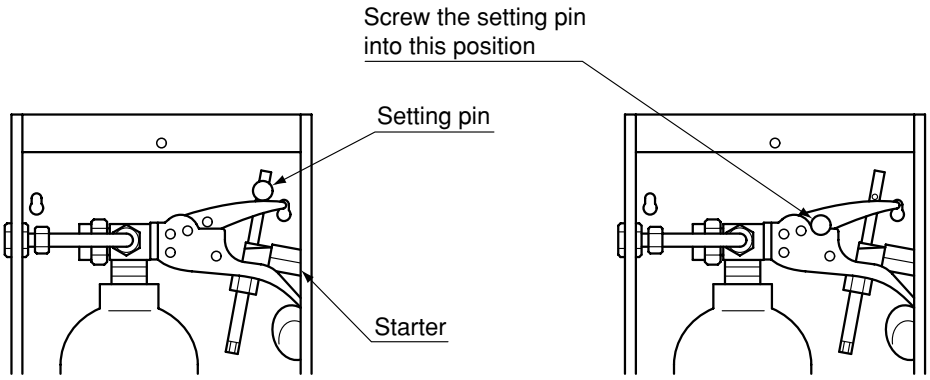

(ACO-7B)

(2) Disconnect the cables for the starter from the connection for the starter and attach a shorting bar to them.

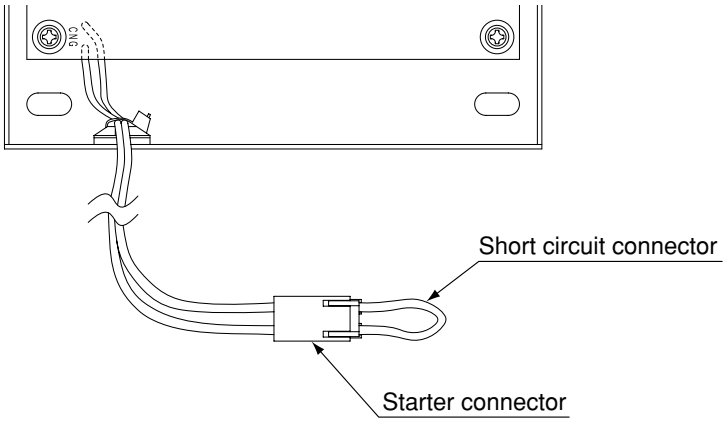

(3) If the remote alarming circuit is connected to the control panel, consult a specialist and in some cases request his or her presence.

2. Visual and Functional Inspection (should be conducted every six months)

Item				Ensure that:
Cabinet	Installation location			It is installed in a location: • Where the cabinet will not be splashed • Which is convenient for inspection • Is not exposed to the danger of damage by fire, etc. • Where there are no obstacles preventing easy operation.
Cabinet	Condition			It is installed firmly and has no deformation or damage.
Cabinet	Control panel	Operation unit	POWER lamp	It is turned on.
Cabinet	Control panel	Operation unit	AUTO/MANUAL toggle switch	It has been set.
Cabinet	Control panel	Operation unit	DETECTION/DIS-CHARGING/DIS-CONNECTION indicator lamp	In it each indicator lamp has no deformation, damage or has fallen.
Cabinet	Control panel	Operation unit	MANUAL START button	In it the acrylic cover of the outer cap has no cracks.
Cabinet	Control panel	Operation unit	Other	It is not contaminated with oil, etc.
Cabinet	Control panel	Terminal block	Condition	In it connections have no looseness or corrosion.
Cabinet	Control panel	Other		It has no immersion of oil, water, etc.
Cabinet	Container and other	Container		It has no deformation, damage and has not fallen.
Cabinet	Container and other	Pressure gauge		For AFF-6B, the pointer is in the green area.
Cabinet	Container and other	Retaining band		It has no looseness.
Cabinet	Container and other	Starter and other	Starter	It has no deformation or damage. The setting pin is attached to the starter shaft. Lock pin keeper shall have been fixed to the kipping holes. (in case of types ACO-60B, 100B)
Cabinet	Container and other	Starter and other	Condition	It is attached to the lower lever firmly.
Cabinet	Container and other	Starter and other	Lead	It has no damage.
Cabinet	Container and other	Starter and other	Gas generator	It has not been used for more than 4 years. (Equipment used for more than 4 years should be replaced.)
Piping	Copper pipe			It has no flatness or corrosion, and is not crushed.
Piping	Joint			It has no looseness.
Piping	Fixing			It is fixed securely.
Wiring	Type			It is a heat resistant cable.
Wiring	Coating			It has no damage.
Wiring	Protection			It has proper protection for wiring at opening.
Nozzle	Condition			It is installed firmly and has no deformation, damage, corrosion, etc.
Nozzle	Installing position and other			It is installed in a proper position and oriented in the appropriate direction.
Nozzle	Nozzle cover			It has no foreign matter on it. The nozzle cover is attached.
Thermistor heat detectors	Condition			It is installed firmly and has no deformation, damage, corrosion, etc.
Thermistor heat detectors	Installing position			It is installed at a proper position.
Thermistor heat detectors	Other			It has no foreign matter on it. It has not been used for more than 4 years. (Equipment used for more than 4 years should be replaced.)

3.Comprehensive Inspection (Should be conducted every year)

In the comprehensive inspection, in addition to the visual and functional inspection, check the following items.

* Before the inspection, move the setting pin within the housing to the pre-setting position and disconnect the wiring of the starter from the starter terminals. See the “1. Pre-inspection Procedure” section.

<table>
<tr><th colspan="2">Inspection Items</th><th>Ensure that:</th></tr>
<tr><td rowspan="2">Operation Testing</td><td>Using a thermistor heat detector</td><td>Test the operation of the thermistor heat detector to check the display of the control panel and the operation of the remote alarming function following the instructions described in “8. Testing and Setting” in Chapter 2.</td></tr>
<tr><td>Using the MANUAL START button</td><td>Test the MANUAL START button to check the display of the control panel and the operation of the remote alarming function following the instructions described in “8. Testing and Setting” section in Chapter 2.</td></tr>
<tr><td colspan="2">Measuring the Amount of Extinguishing Agent</td><td>Measure the weight of the container with the starter installed to ensure that required amount of extinguishing agent is contained.
<table>
<tr><th>Model</th><th></th><th>Amount of Gas</th><th>Remarks</th></tr>
<tr><td>ACO-4B</td><td rowspan="7">Weight indicated at the upper part of the container</td><td>2.0 kg</td><td rowspan="8">When the amount of gas has diminished to lessmore than 10%, refill the container.</td></tr>
<tr><td>ACO-7B</td><td>3.2 kg</td></tr>
<tr><td>ACO-10B,</td><td>4.6 kg</td></tr>
<tr><td>ACO-15B, 15BZ</td><td>6.8 kg</td></tr>
<tr><td>ACO-30B</td><td>13.3 kg</td></tr>
<tr><td>ACO-60B</td><td>28.0 kg</td></tr>
<tr><td>ACO-100B</td><td>45.0 kg</td></tr>
<tr><td>ADC-20B</td><td>——</td><td>Amount of gas for pressurization 155 g</td></tr>
<tr><td>AFF-6B</td><td>——</td><td>Weight of the agent 6.7 kg</td><td>If the pointer of the pressure gauge is outside the green area, refill the container.</td></tr>
</table></td></tr>
</table>

Setting

To set the equipment after the inspection, follow the instructions in the “ 8. Testing and Setting” section in Chapter 2.

4. Replacement Parts

1. Replace the following parts every 4 years.

1) The gas generator of the starter within the housing
2) Thermistor heat detectors
3) Extinguishing agent (foam-type agent, dry chemical-type agent)(8 years)
4) Nozzle covers, O-rings
5) Standby power source (optional) (See P.49 "Standby Power Source")

5. Replacing the Gas Generator

If the extinguishing agent is discharged after starting, or 4 years have passed since the installation, replace the gas generator.

1. ADC, ACO

(1) Remove the setting pin from the setting position and attach it to the pre-setting position. (In the case of discharging the agent, the setting pin should remain in the setting position.)

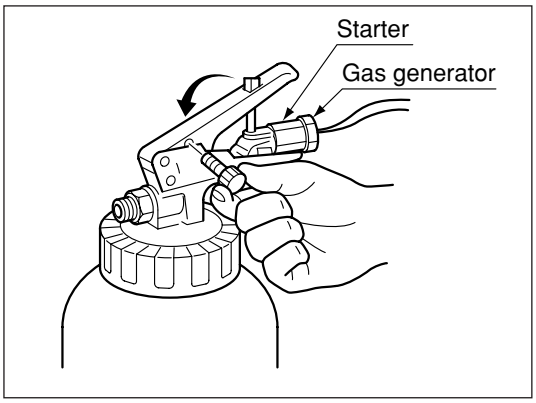

(2) Turn off the POWER switch, and remove the wire of the gas generator connected to the starter from the starter connector.

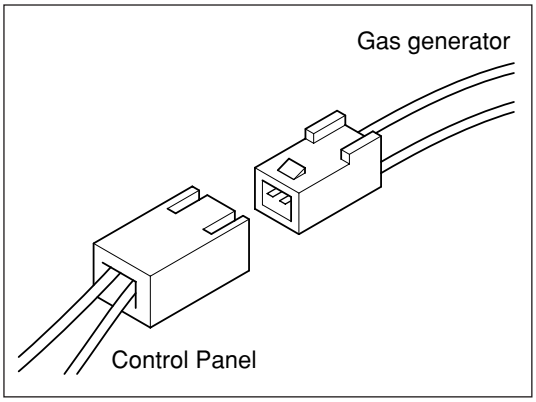

(3) By loosening the hexagon cap nut, detach the container and the connecting copper tube.

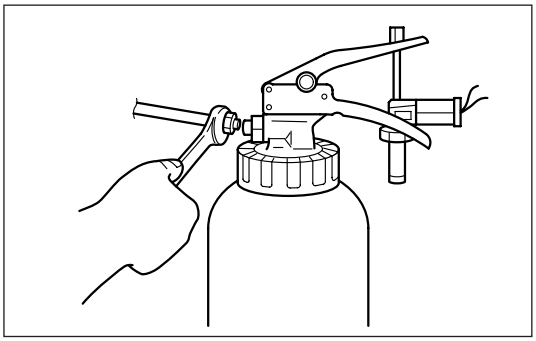

(4) By removing the bracket, take the agent container out from the cabinet.

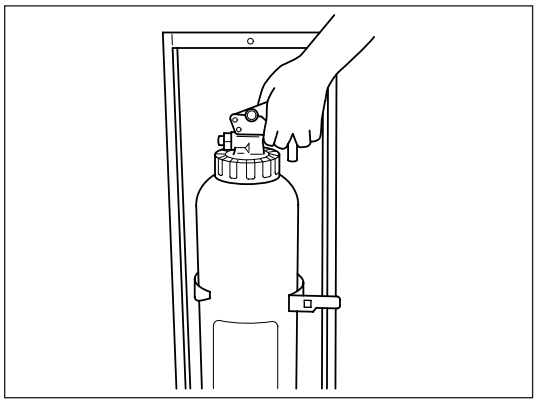

(5) Disconnect the generator and the mounting joint from the starter with a wrench. When the agent is discharged, the upper lever lowers and the starter contains the internal pressure, which will be gone during releasing the gas generator.

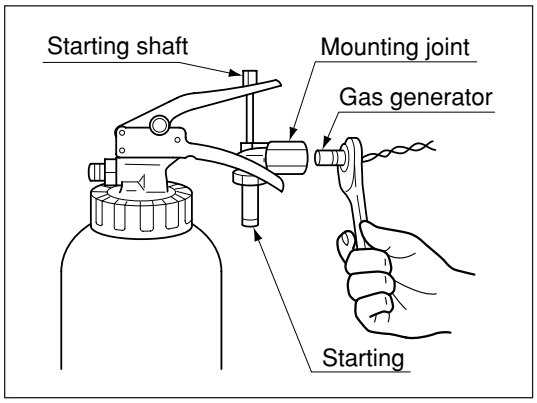

(6) Install a new gas generator.
- When discharging the agent, also replace the metal strainer with a new one.
- Ensure that the O-ring is attached to the gas generator.

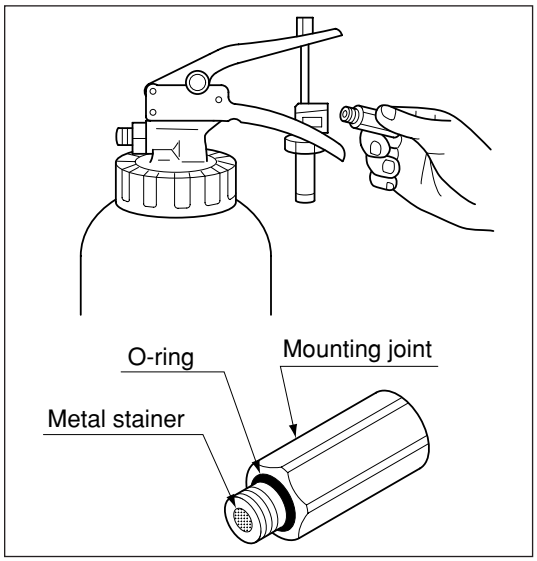

(7) Lifting the starter shaft, install the gas generator.

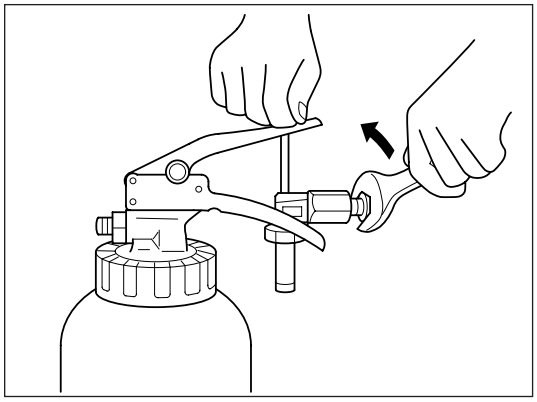

2. AFF-6B

(1) Turn off the POWER switch, and remove the wire of the gas generator connected to the starter from the starter connector.

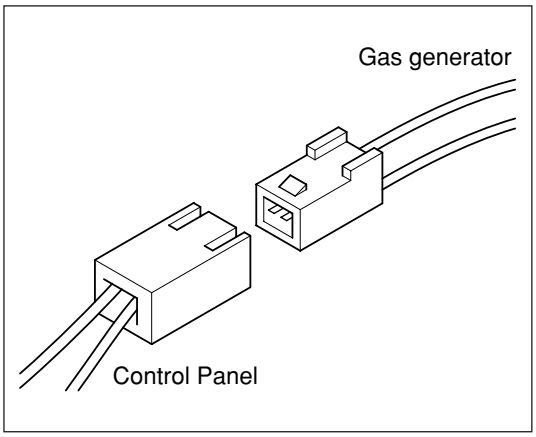

(2) By loosening the hexagon cap nut, detach the container and the connecting copper tube.

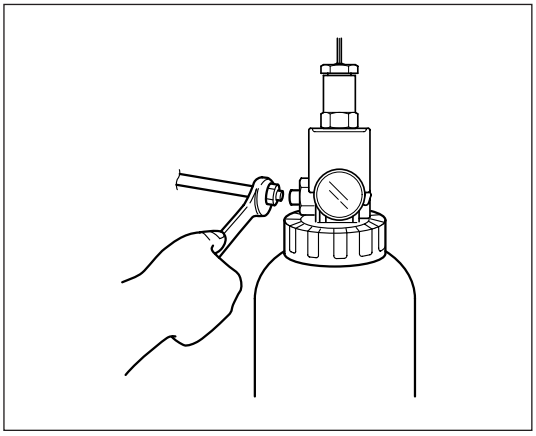

(3) By removing the bracket, take the agent container out from the cabinet.

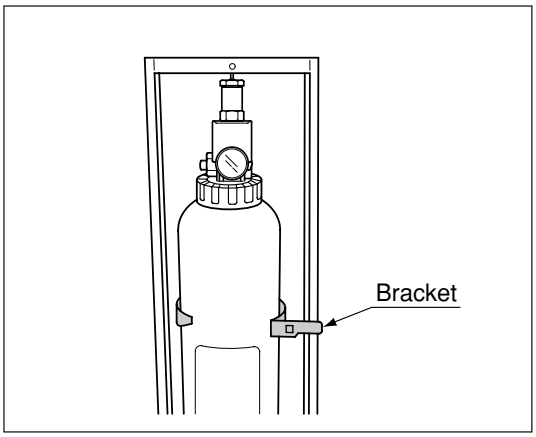

(4) Removal of gas generator

1) If four years have passed since installation, use a spanner to remove the gas generator from the cylinder.

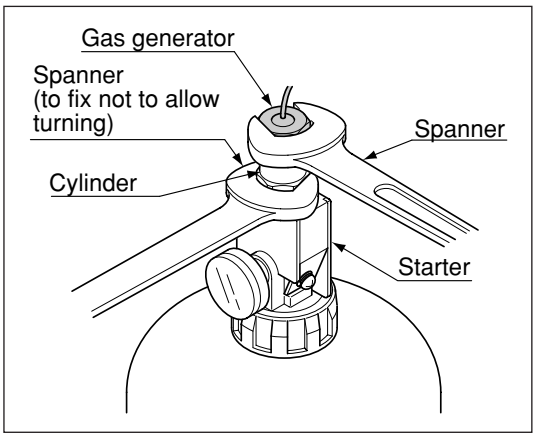

⚠ **Caution** When removing the gas generator, clinch the cylinder bottom with a spanner so as to prevent the cylinder from getting loose.

2) 0If four years have passed since installation, use a spanner to remove the gas generator from the cylinder.

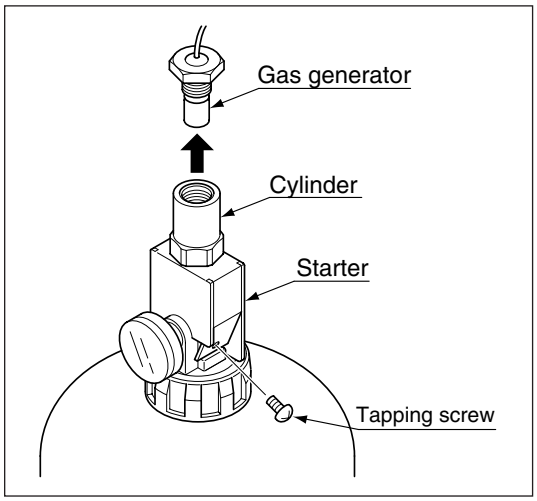

(5) By loosening the hexagon cap nut, detach the container and the connecting copper tube.

1) 0If four years have passed since installation, use a spanner to remove the gas generator from the cylinder.

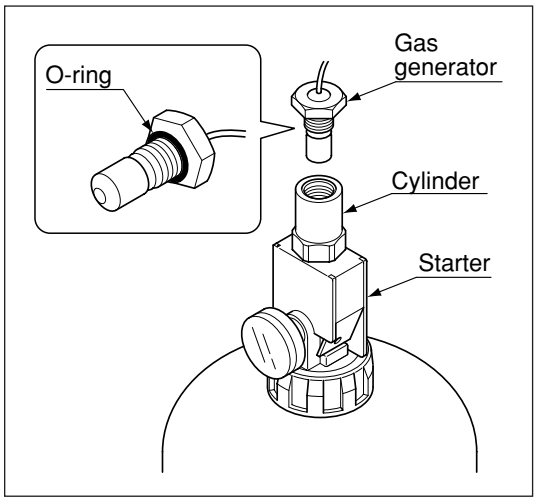

2) 0If four years have passed since installation, use a spanner to remove the gas generator from the cylinder.

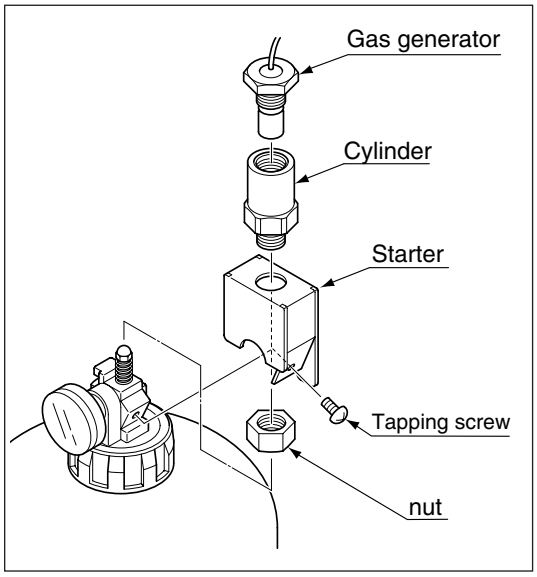

6. Replacing the Extinguishing Agent

1. ADC-20B

(1) Loosen the exhausting-pressure tap with a flat-blade screwdriver to discharge the remaining internal pressure.

Note: After discharging, secure the tap to the previous position and affix a sticker.

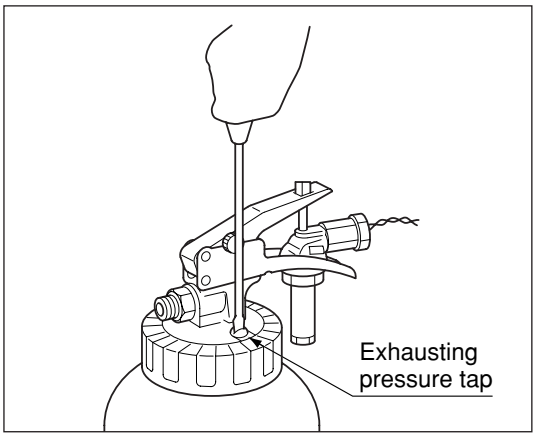

(2) Fix the agent container to a clamping stand, then loosen the valve cover gradually with a special wrench and remove it from the container.

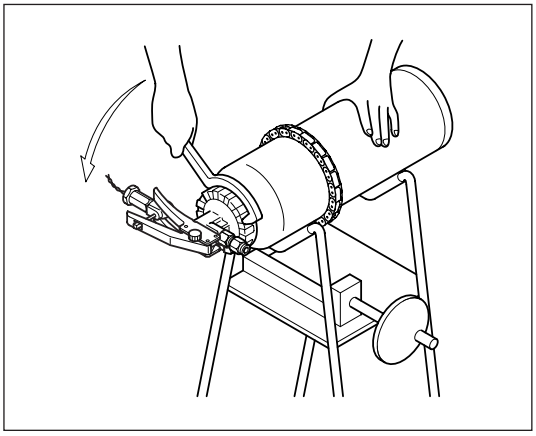

(3) Take out the valve from the container, remove the remaining extinguishing agent from the container and fill the specified amount (6.0kg) of new agent.

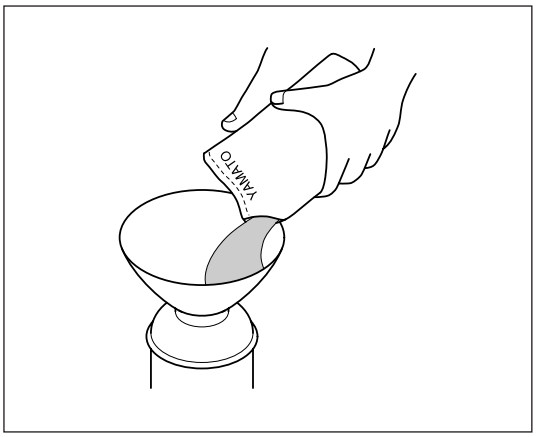

(4) With the gas cylinder detached, grasp the upper and lower levers together and blow air into the dry chemical-discharging pipe to check the ventilation.

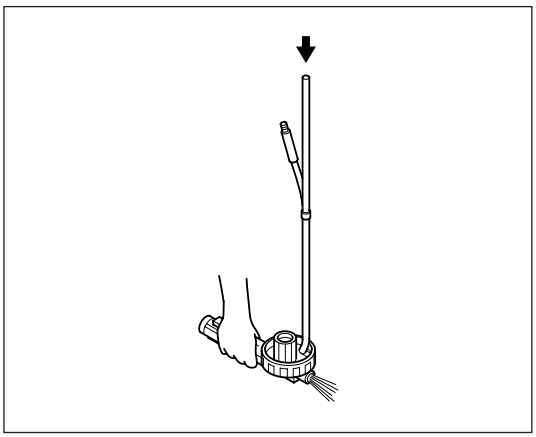

(5) Replace the moisture-proof sealing cap of the dry chemical-discharging pipe with a new one.

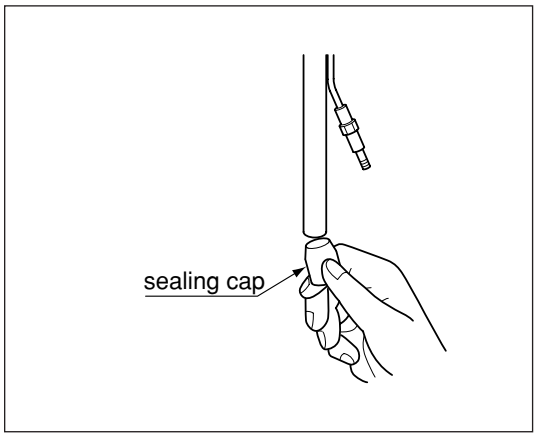

(6) Attach the setting pin to the pre-setting position. After that, mount a new gas container for pressurization.

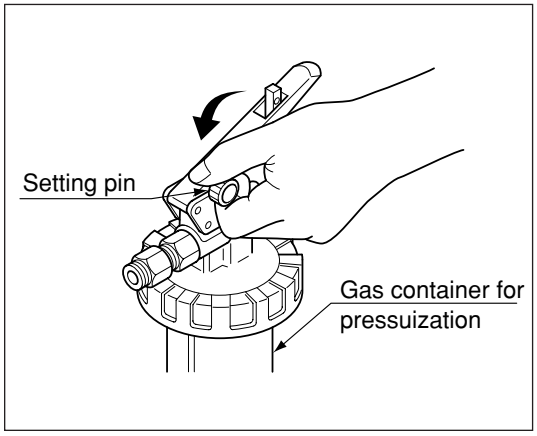

(7) Insert the valve. Shake it well to disperse the extinguishing agent before inserting. Do not force it.

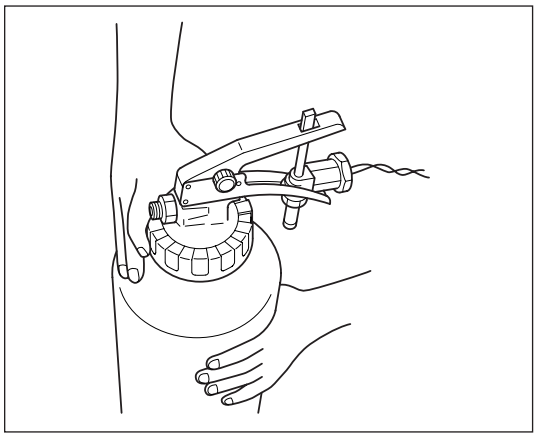

(8) After tightening the valve cover temporarily, fix the agent container to the clamping stand again and tighten the cover securely with a special wrench.

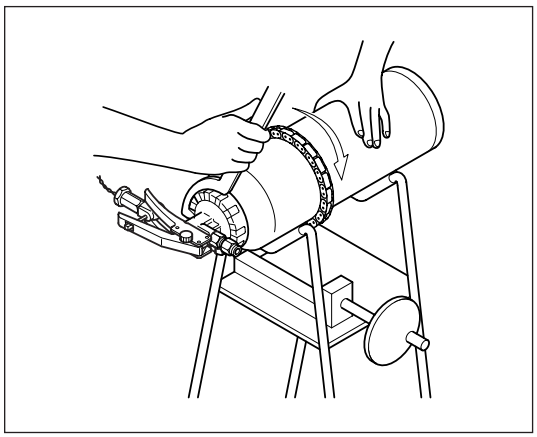

2. AFF-6B

(1) Ensure that the pressure gauge indicates 0 MPa. If pressure exists, loosen one tapping screw with a cross recess for fixing the starter, and remove the starter. Then, turn the container upside down and press the valve shaft using a dedicated lever, so as to discharge pressure.

(2) Fix the agent container to a clamping stand, then loosen the valve cover gradually with a special wrench and remove it from the container.

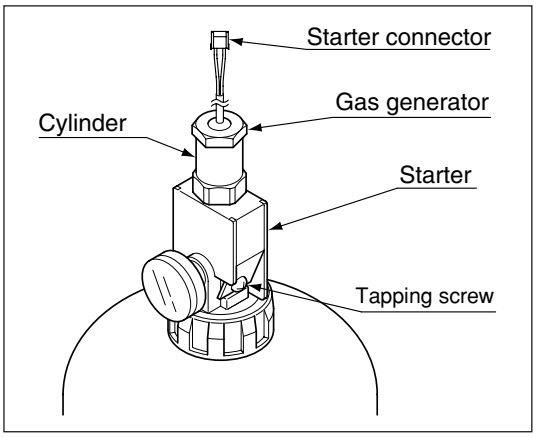

(2) Take the remaining extinguishing agent out of the container and fill the specified amount of new agent.

*Foam extinguishing agent: 6.0 L-6.7 kg

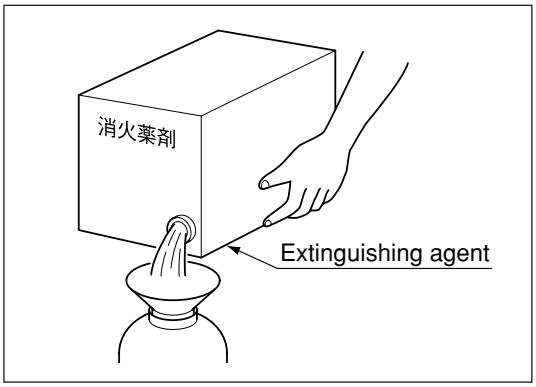

(4) Wash the removed valve thoroughly with water and dry it thoroughly with nitrogen gas etc. Clean the O-ring and mouthpiece of the container with dry cloth, apply grease to the O-ring and set it to its original position and tighten it securely.

(5) Attach the pressurization jig to the valve and connect it to a nitrogen gas cylinder. Apply pressure as specified (0.7-0.98MPa). Filling nitrogen gas requires the use of a dedicated lever to press down the valve shaft.

(6) After pressurizing, ensure that there is no leakage of pressure from the filling mouth etc.

(7) Mount the starter as in the original.

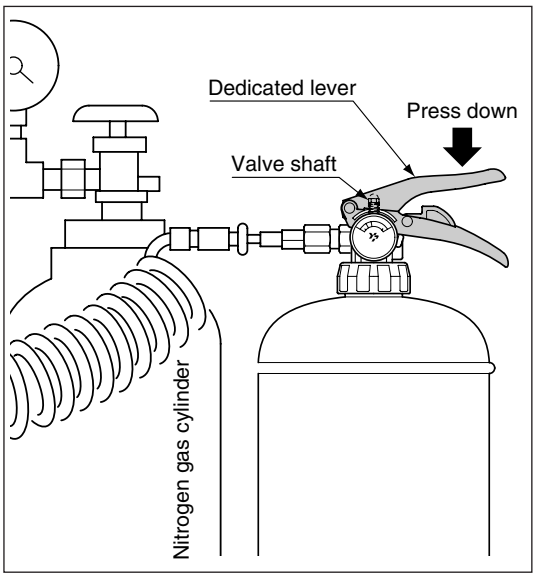

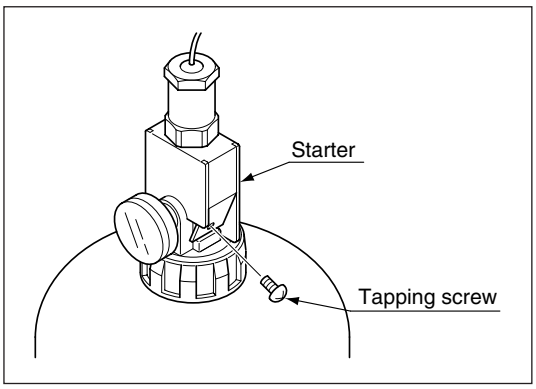

7. Cleaning the Copper Pipe

After the AFF-6B (foam) or ADC-20B (dry chemical) is used:

(1) Take out the agent container.
(2) Attach the jig to the copper pipe within the cabinet, connect the mounting hardware on a nitrogen gas cylinder.
(3) Open the valve of the cylinder and clean the pipe.
(With a regulator's secondary pressure of about 1MPa)

⚠ **Caution** 1) For AFF-6B (foam) type, detach the nozzle and clean the pipe well in order not to leave deposits of agent inside.
2) Immerse the nozzle in water and if it is clogged with the agent, remove it. After cleaning, set the nozzle to its original position.

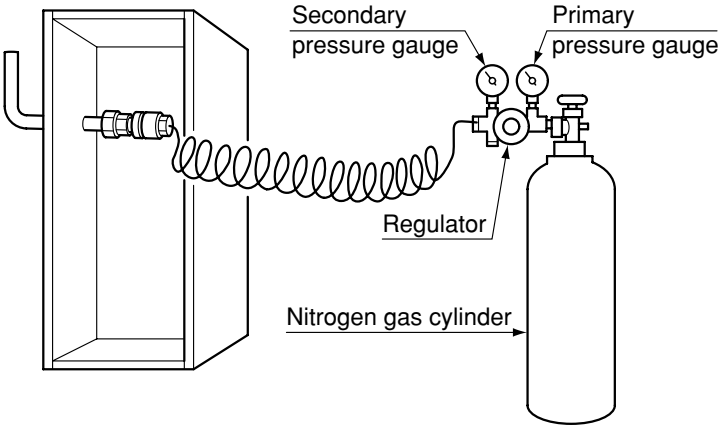

8. Replacing the Nozzle cover

Replace a deformed nozzle cover, which prevents the device from working successfully. A nozzle cover, which has been used for discharging extinguishing agent, should also be replaced.

(1) Clean the nozzle.
(2) Apply grease to the O-ring and set it into the O-ring groove.
(3) Attach the nozzle cover.

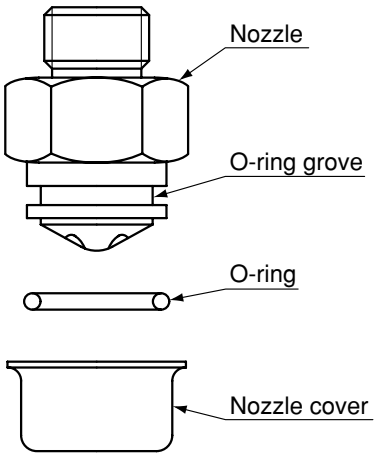

(ADC-20B)

9. Care after Replacement and Use

Consult us or your local dealer for replacement or refilling.

Design Standards

1. Method to Calculate the Amount of Carbon Dioxide Fire Extinguishing Agent ····· 74
2. Method to Calculate the Amount of Dry Chemical Fire Extinguishing Agen ····· 75
3. Method to Calculate the Amount of Foam Fire Extinguishing Agent ····· 75
4. Attached Table: Coefficient of Gas Fire Extinguishing Agent by Type of Dangerous Substance ····· 76

1. Method to Calculate the Amount of Carbon Dioxide Fire Extinguishing Agent

1. Whole area discharge method

Quantity calculated at a rate shown in Table 1. However, if the quantity is below the quantity shown in this table, the quantity shown in the field of the minimum total amount of the agent must be used.

Batching by volume Table 1

Volume of protected compartment (m^3)	Quantity of agent per m^3 of protected compartment (kg)	Minimum of agent (kg)	Amount of addition to the opening per m^2 (kg)
Less than 5	1.2	—	5
From 5 to less than 15	1.1	6	5
From 15 to less than 50	1.0	17	5
From 50 to less than 150	0.9	50	5
From 150 to less than 1500	0.8	135	5

*1 The values must be multiplied by the coefficient shown in the attached table according to the type of the dangerous substance stored or handled in the protected compartment.

*2 In principle, the ventilator in the protected compartment must be stopped before the discharge of the agent, but if the machine cannot be stopped, the displacement per minute multiplied by 0.75 kg/m^3 must be added.

(Example of calculation)

• Basic amount of agent

Volume: 2.0m × 1.5m × 3.0m = 9.0m^3

Amount of agent: 9.0m^3 × 1.1kg/m^3 = 9.9kg

• Amount of addition to the opening

Opening area: 0.5m × 0.8m = 0.4m^2

Amount of agent: 0.4m^2 × 5.0kg/m^2 = 2.0kg

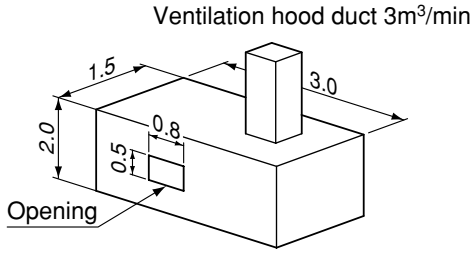

Therefore, 9.9kg + 2.0kg =11.9kg is required as the agent.
Moreover, if the fan cannot be stopped and the ventilation airflow is 3m^3 per minute,
3.0m^3/min × 0.75kg/m^3 = 2.25kg
Therefore, 11.9kg + 2.25kg = 14.15kg is required as the agent.

2. Local discharge method

The quantity calculated as shown in the following (a) or (b) is multiplied by 1.4. This quantity must be stored, and it must be more than the quantity multiplied by the coefficient specified in the attached table according to the dangerous substance to be handled:

(a) Area formula

The quantity calculated at a rate of 13kg per m^2 for the surface area of the protected target (if the protected target has one side of less than 0.6m, its surface area is calculated by using the length of 0.6m.

(b) Volume formula

The quantity determined by the following formula is multiplied by the volume of the protected space (the space surrounded by the portions 0.6m away from every portion of the protected target.

Q = 8 - 6 (a/A)

Q: Quantity of the fire extinguishing agent per unit volume (kg/m^3)

a: Total of the areas of the fixed side walls actually built around and within 0.6m of the protected target (m^2)

A: Total area of all side faces of the protected space (total of the areas of the fixed side walls actually built and the areas of the imagined fixed side walls in the portions where there are no fixed side walls) (m^2)

2. Method to Calculate the Amount of Dry Chemical Fire Extinguishing Agent

1. Whole area discharge method

Quantity calculated at a rate shown in Table 2.

Table 2

Quantity of agent per m^3 of protected compartment (kg)	Amount of addition to the opening per m^2 (kg)
0.36	2.7

*1 The values must be multiplied by the coefficient shown in the attached table according to the type of the dangerous substance stored or handled in the protected compartment.

2. Local discharge method

The quantity calculated as shown in the following (a) or (b) is multiplied by 1.1. This quantity must be stored, and it must be more than the quantity multiplied by the coefficient specified in the attached table according to the dangerous substance to be handled:

(a) Area formula
The quantity calculated at a rate of 5.2kg per m^2 for the surface area of the protected target (if the protected target has one side of less than 0.6m, its surface area is calculated by using the length of 0.6m.

(b) Volume formula
The quantity determined by the following formula is multiplied by the volume of the protected space.

Q = 3.2 - 2.4 (a/A)

Q: Quantity of the fire extinguishing agent per unit volume (kg/m^3)
a: Total of the areas of the fixed side walls actually built around the protected target (m^2)
A: Total area of all side faces of the protected space (for portions without walls, the area of the imagined walls in the portions) (m^2)

3. Method to Calculate the Amount of Foam Fire Extinguishing Agent

The foam aqueous solution is discharged at a rate of more than 5L per m^2 for the surface area of the target.

(Example of calculation)

The normal oil tank is approx. $0.3m^2$ to $1.6m^2$ in size. According to the size of an oil tank, the amount of foam fire extinguishing agent is determined.

- In the case of a $0.3m^2$ oil tank, one 6L type extinguisher is installed because of $0.3m^2 \times 5L/m^2 = 1.5L$
- In the case of a $1.6m^2$ oil tank, two 6L type extinguishers are installed because of $1.6m^2 \times 5L/m^2 = 8.0L$

4. Attached Table: Coefficient of Gas Fire Extinguishing Agent by Type of Dangerous Substance

Coefficient of gas fire extinguishing agent by type of dangerous substance

Type of agent / Dangerous substance	Carbon dioxide	Halide		Dry chemical			
		Halon 1301	Halon 1211	1st class	2nd class	3rd class	4th class
Acrylonitrile	1.2	1.4	1.2	1.2	1.2	1.2	1.2
Acetaldehyde				–	–	–	–
Acetonitrile	1.0	1.0	1.0	1.0	1.0	1.0	1.0
Acetone	1.0	1.0	1.0	1.0	1.0	1.0	1.0
Aniline				1.0	1.0	1.0	1.0
Iso octane	1.0	1.0	1.0				
Isoprene	1.0	1.2	1.0				
Isopropylamine	1.0	1.0	1.0				
Isopropyl ether	1.0	1.0	1.0				
Isohexane	1.0	1.0	1.0				
Isoheptane	1.0	1.0	1.0				
Isopentane	1.0	1.0	1.0				
Ethanol	1.2	1.0	1.2	1.2	1.2	1.2	1.2
Ethylamine	1.0	1.0	1.0				
Vinyl chloride				–	–	1.0	–
Octane	1.2	1.0	1.0				
Gasoline	1.0	1.0	1.0	1.0	1.0	1.0	1.0
Ethyl formate	1.0	1.0	1.0				
Propyl formate	1.0	1.0	1.0				
Methyl formate	1.0	1.4	1.4				
Diesel oil	1.0	1.0	1.0	1.0	1.0	1.0	1.0
Crude oil	1.0	1.0	1.0	1.0	1.0	1.0	1.0
Acetic acid				1.0	1.0	1.0	1.0
Ethyl acetate	1.0	1.0	1.0	1.0	1.0	1.0	1.0
Methyl acetate	1.0	1.0	1.0				
Propylene oxide	1.8	2.0	1.8	–	–	–	–
Cyclohexane	1.0	1.0	1.0				
Diethylamine	1.0	1.0	1.0				
Diethyl ether	1.2	1.2	1.0	–	–	–	–
Dioxane	1.6	1.8	1.6	1.2	1.2	1.2	1.2
Heavy oil	1.0	1.0	1.0	1.0	1.0	1.0	1.0
Lubricating oil	1.0	1.0	1.0	1.0	1.0	1.0	1.0
Tetrahydrofuran	1.0	1.4	1.4	1.2	1.2	1.2	1.2
Kerosene	1.0	1.0	1.0	1.0	1.0	1.0	1.0
Triethylamine	1.0	1.0	1.0				
Toluene	1.0	1.0	1.0	1.0	1.0	1.0	1.0
Naphtha	1.0	1.0	1.0	1.0	1.0	1.0	1.0
Rapeseed oil				1.0	1.0	1.0	1.0
Carbon bisulfide	3.0	4.2	1.0	–	–	–	–
Vinyl ethyl ether	1.2	1.6	1.4				
Pyridine				1.0	1.0	1.0	1.0
Butanol				1.0	1.0	1.0	1.0
Propanol	1.0	1.0	1.2	1.0	1.0	1.0	1.0
2-propanol	1.0	1.0	1.0				
Propylamine	1.0	1.0	1.0				
Hexane	1.0	1.0	1.0	1.2	1.2	1.2	1.2
Heptane	1.0	1.0	1.0	1.0	1.0	1.0	1.0
Benzene	1.0	1.0	1.0	1.2	1.2	1.2	1.2
Pentane	1.0	1.0	1.0	1.4	1.4	1.4	1.4
Boiled oil				1.0	1.0	1.0	1.0
Methanol	1.6	2.2	2.4	1.2	1.2	1.2	1.2
Methyl ethyl ketone	1.0	1.0	1.0	1.0	1.0	1.2	1.0
Monochloro benzene						1.0	

Remark: – marked agent cannot be used as a fire extinguishing agent for the dangerous substance concerned.
Isopropyl alcohol (IPA) CO_2 coefficient 1.0

Overview of Instruction Manual

1. Monitoring Status ····· 77
2. Operation ····· 78
3. Operating Conditions ····· 79
4. Abnormal State ····· 79
5. After the System is Operated ····· 79
6. List of Appearance Diagrams ····· 80

1. Monitoring Status

1) The power source lamp and the Auto lamp are ON in green.

2)

• Automatic monitoring status
In the event of fire, if the AUTO/MANUAL switch is set to the AUTO position, the system will start the fire extinguishing operation automatically.

* You can also operate the system manually while in AUTO mode.

• Manual monitoring status
In the event of fire, if the AUTO/MANUAL switch is in "MANUAL", the start lamp blinks and the alarming buzzer intermittently sounds due to the actuation of the thermistor heat detector or other fire detector, but the extinguishing agent is not discharged.

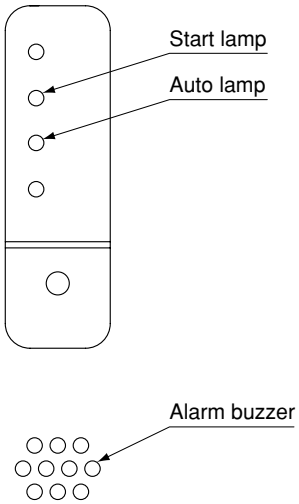

2. Operation

1) Automatic status

All of the actions will be started automatically as detectors detect fire.

If the mode select switch is in "AND", the start lamp blinks and the alarming buzzer intermittently sounds due to the actuation of either the thermistor heat detector or other fire detector, but the extinguishing agent is not discharged. If both are actuated, the extinguishing agent is discharged to put out the fire.

Type of detector
- Thermistor heat detector
- Tixed temperature spot type detector (optional)
- Smoke detector (optional)
- Flame detector (optional)

* [You can also operate the system manually]

Pressing the manual start button allows the system to initiate fire extinguishing operations

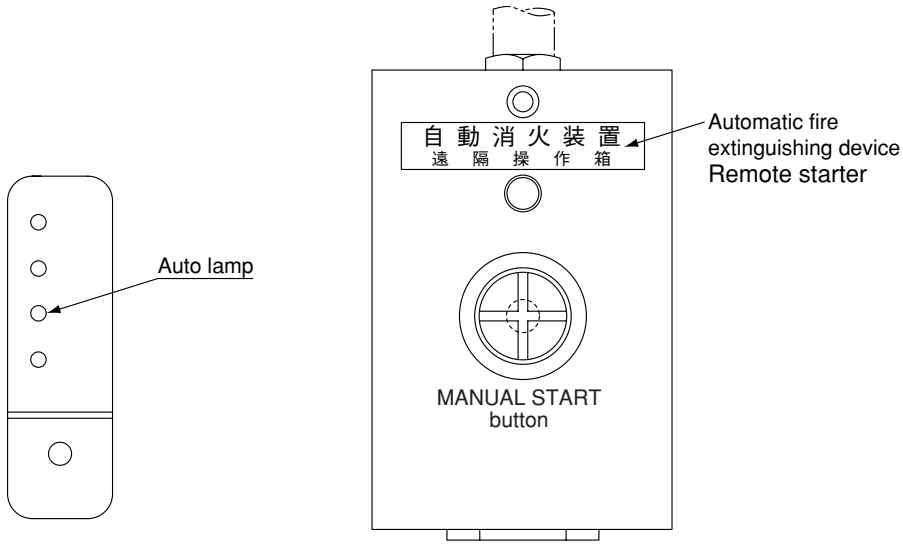

Main body of ABLE

Remote starter

2) Manual status

Pressing the manual button allows the system to operate.

In the event of fire, the start lamp blinks and the alarming buzzer intermittently sounds due to the actuation of the thermistor heat detector or other fire detector, but the extinguishing agent is not discharged.

3. Operating Conditions

(1) The start lamp is ON.
It blinks when the thermistor heat detector or other fire detector are actuated during the manual operation state or with the mode select switch in "AND" or when the delay timer is running.

(2) The alarming buzzer continuously sounds.
It intermittently beeps when the thermistor heat detector or other fire detector are actuated during the manual operation state or with the mode select switch in "AND" or when the delay timer is running.

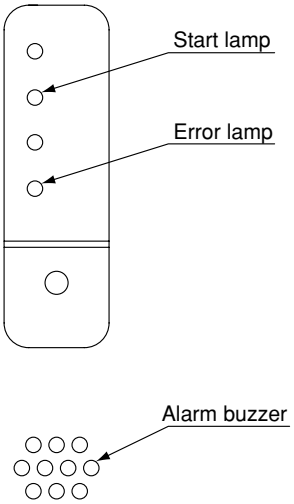

4. Abnormal State

1) In the case of power failure
The power source lamp turns OFF, and an abnormal signal transfer is outputted.
When the standby power supply is connected, the power source lamp turns ON in red, and an abnormal signal transfer is outputted.
Note: If the voltage of the standby power supply falls to less than 12V during operation with the standby power, the standby power input is cut off and the device is completely powered off for protection of operation. Therefore, the power source lamp will be OFF.

2) In the case of anomalies such as disconnection
At the time of disconnection, short circuit or other anomalies, the corresponding error lamp on the control panel turns ON and the error lamp blinks. Moreover, the alarming buzzer intermittently beeps.

5. After the System is Operated

1) Turn the power switch OFF and restore the system.

2) After the system has been operated, you must contact us or our agents to have the fire extinguishing agent refilled.
(If the gas generator is used as the starter, it needs to be replaced)

6. List of Appearance Diagrams

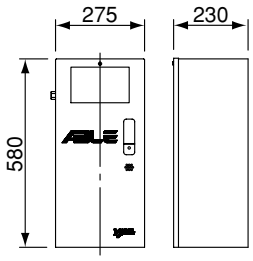

- ACO-4B
  (CO_2 / 2.0kg)
- ACO-7B
  (CO_2 / 3.2kg)

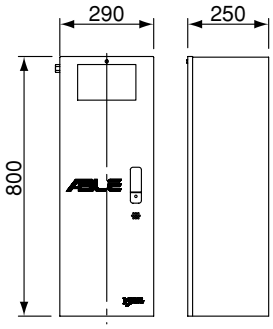

- AFF-6B
  (Foam: 6.0L)
- ADC-20B
  (Dry Chemical: 6.0kg)

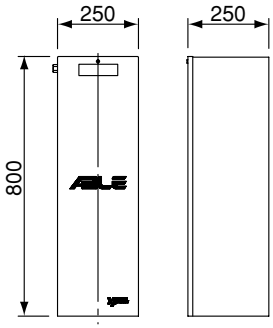

- ACO-15BZ
  (CO_2 / 6.8kg)

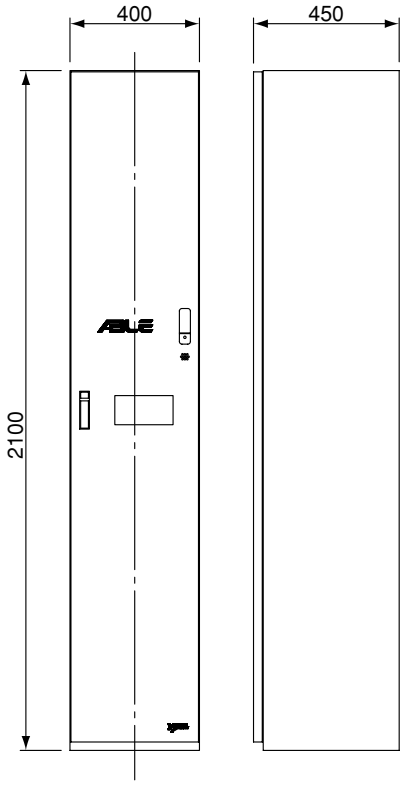

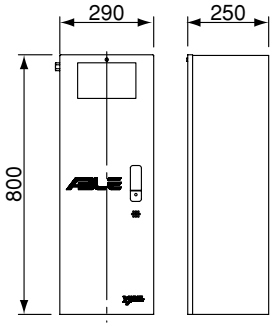

- ACO-10B
  (CO_2 / 4.6kg)
- ACO-15B
  (CO_2 / 6.8kg)

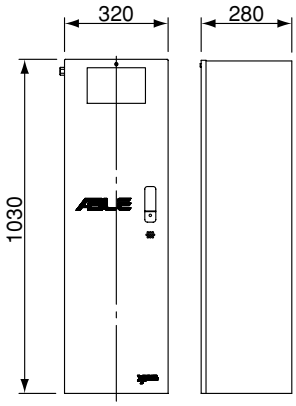

- ACO-30B
  (CO_2 / 13.3kg)

- ACO-60B
  (CO_2 / 28kg)
- ACO-100B
  (CO_2 / 45kg)

Reference Material

1. Theoretical Concentration and Design Concentration of Carbon Dioxide ····· 81
2. Concentration Calculation of Carbon Dioxide ····· 81 - 82
3. Fire Extinguishing Effect of Carbon Dioxide and Danger of its Discharge ····· 82
4. Temperature Characteristics of the Thermistor Sensor ····· 83
5. Q&A ····· 84 - 86

1. Theoretical Concentration and Design Concentration of Carbon Dioxide

The oxygen concentration in air is 21%, and generally if this oxygen concentration is lowered to 15% or less, combustion cannot continue. This concentration like 15% is called combustion limit concentration. The amount of carbon dioxide to be discharged in order to lower oxygen concentration to 15% from 21%, i.e., in order to perform fire extinguishing, and the concentration of the discharged carbon dioxide are expressed as follows:

$G = (21-O_2)/O_2 \times V$ ----- Formula (1)
CO_2 (%) $= (21-O_2)/O_2 \times 100$ ----- Formula (2)

G: Amount of carbon dioxide to be discharged (m^3)
V: Room volume (m^3)
O_2: Combustion limit oxygen concentration for a substance (%)
CO_2: Theoretical concentration of carbon dioxide (%)

When combustion limit concentration is set to 15%, the coefficient of Formula (1) is 0.4. That is, it is necessary is discharge the amount of carbon dioxide which is equivalent to 40% of the room by volume, and the concentration of the carbon dioxide at this time is expressed as Formula (2).
That is to say, this value is 28% which is called theoretical concentration of carbon dioxide.
Since this is a theoretical concentration, a safety ratio of 20% must be added in consideration of gas leak etc. The resulting value is called design concentration.
If the theoretical concentration is 28%, this value is 34%.
Article 17 of Fire Service Law, dangerous substances legislations, damage insurance regulations, etc. are all based on the above-mentioned standards to calculate the amount of gas.
Table 1 shows the provision for 34% design concentration and divides a protected compartment into several phases for each of which the amount of carbon dioxide per m3 is defined. This value is called volume coefficient and is calculated by adding the safety ratio to Formula (2).

Design and Execution Management of Fire Extinguishing Equipment
Under the editorship of Fire and Disaster Management Agency of Ministry of Home Affairs
Based on the material of Japan Pipework Association

2. Concentration Calculation of Carbon Dioxide

One mol of carbon dioxide (CO_2) is 22.4L for 44g at 0°C and one atmospheric pressure.
If 1kg of liquefied carbon dioxide is discharged into the atmosphere at 20°C, it will be equal to 546L in the following formula:

$PV = W/M \times RT$
Therefore,
$V = 1000/44 \times 0.082 \times 293 = 546L$

P: Pressure (atmospheric pressure: 1)
V: Discharged volume
R: 0.082 (gas constant in ideal gas)
T: Absolute temperature (273+20°C) °K
W: CO_2 weight (g)
M: CO_2 1 mol (44g)

Furthermore, the following table shows the relation between the amount of gas to be discharged with the agent capacity for our fire extinguishing devices and the room volume at CO_2 concentration of 28% and 34%.

Table 2

Amount of liquefied carbon dioxide (kg)	(A) Amount of gas discharged at 20°C (m^3)	(B) Theoretical concentration By Formula (1) and (A) G = 0.4V (m^3)	(C) Room volume at CO_2 concentration of 28% By safety ratio of 20% (B) x 0.8 (m^3)
3.2	1.747	4.36	3.4
4.6	2.511	6.27	5.0
6.8	3.713	9.28	7.4
13.3	7.262	18.16	14.5
28.0	15.288	38.22	30.5
45.0	24.572	61.43	49.1

This table assumes a closed room, and if there is an opening, the CO_2 concentration will change. Therefore, this is only a guide

3. Fire Extinguishing Effect of Carbon Dioxide and Danger of its Discharge

Table 3

Fire extinguishing by suffocation		Although carbon dioxide itself is not toxic, it is used for fire extinguishing by suffocation and its suffocative action affects the human body. Since the whole area discharge method uses the carbon dioxide gas concentration of 40%, the CO2 has a bad influence on the human body in a protected compartment.
Specific gravity		Since carbon dioxide is heavier than air (the specific gravity of CO_2 is 1.53) and easily accumulate in an underground pit etc., it is necessary to be careful after fire extinguishing.
Influence of concentration on human bod	3%	Dyspnea, headache, vomiting, dizziness, mildly-narcotic, decline of hearing, increase in blood pressure and pulse
	4%	Headache
	5%	After 30 minutes, the symptoms of poisoning, headache, perspiration and dizziness
	8%	Dizziness, lethargy, coma
	9%	Clear dyspnea, loss of blood pressure, congestion, and death after 4 hours.
	10% or more	Visual impairment, spasm, overbreathing, blood pressure increase, loss of consciousness
	25% or more	Central nervous system depression, coma, spasm, death from suffocation

Literature cited on the influence of the concentration:"Study on the toxicity of combustion products in fire disasters" February 1987, Japan Fire Retardant Association

Moreover, according to the U.S. National Fire Protection Association (NFPA), carbon dioxide also exists in the breath of animals and it is harmless in itself and low in toxicity, It is known that if the breathing is stopped as long as possible, the concentration of carbon dioxide will reach easily to about 6% by volume. As the concentration of carbon dioxide increases, the stimulus of autonomic nerves to the respiratory organs is more active. According to the experiment, the air which contains carbon dioxide of 3% to 4% accelerates breathing, but if a person remains in such an air for a comparatively short time, he or she will not be seriously affected.
Most people can stand the concentration of approx. 9% without losing consciousness for several minutes. If this concentration is exceeded, they will become unconscious, and with concentration of about 20%, they will die in 20 to 30 minutes unless they are carried out into a place with fresh air. The discharged gas is very dangerous when its concentration is 9% or more.

4. Temperature Characteristics of the Thermistor Sensor

Appearing below is the resistance-temperature characteristic for the thermistor sensor "DTA-2".
Minimum standard setting temperature of 60 [°C] indicates 12.3 [kΩ] and max. 120 [°C] indicates 1.9 [kΩ].
When setting to more than 120 [°C], please use the signal converter "TTA-2" (for high temperature).
For the resistance of the thermistor sensor, refer to the values of the following graph.
Approximate resistance can be calculated in the formula.
R= R25 expB (1/T-1/T25)

Example) Resistance at 100 [°C]
R = R100 exp3970 (1/373-1/298) = 3.440 [kΩ]

R: Resistance at the required temperature (T [K])
R25: Resistance at 25 [°C] (273+25 [K]) (50.0 kΩ)
B constant: 3970 [K] ± 2 [%]

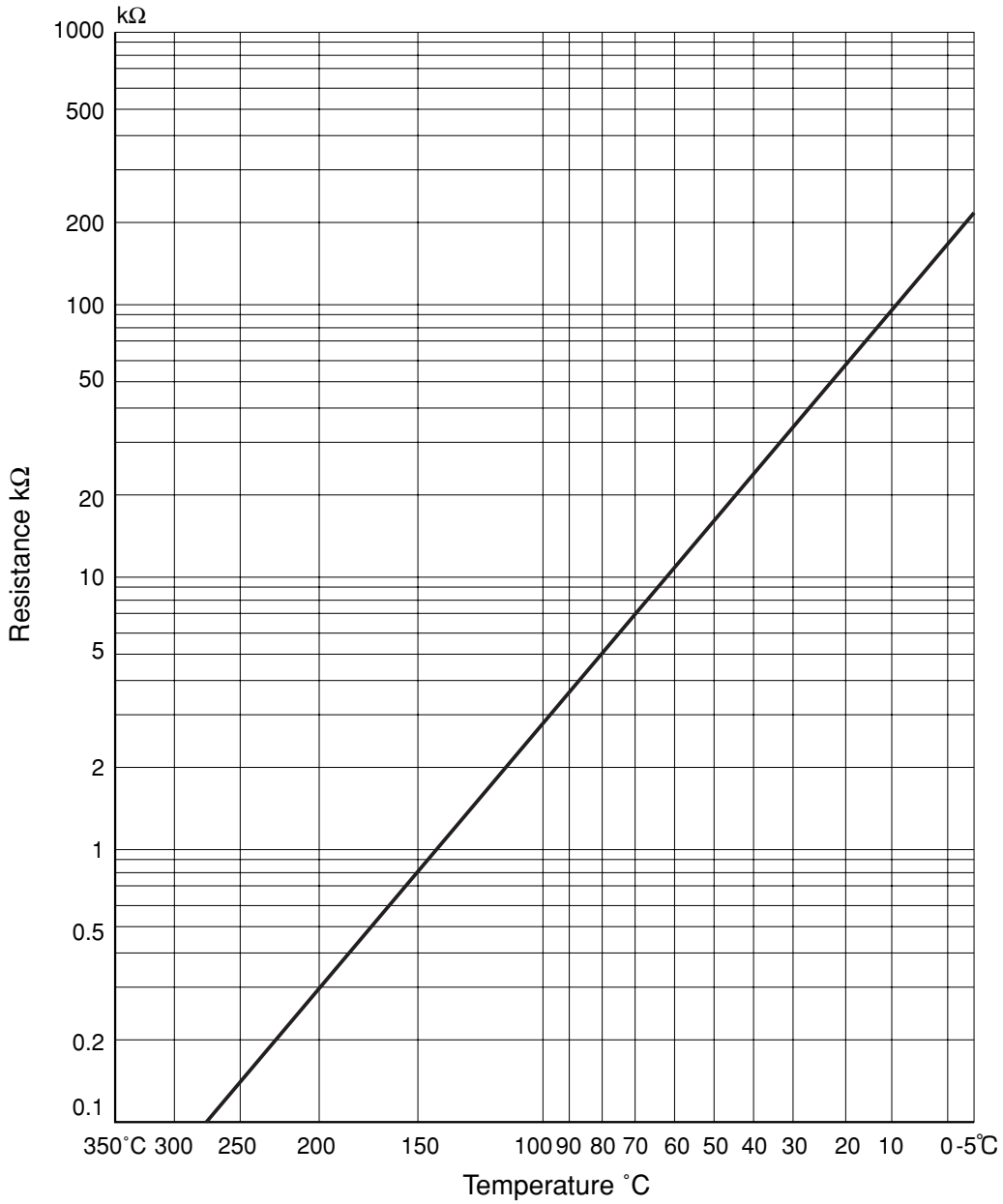

5. Q&A

Q1: The control panel of ABLE includes the detection signal transfer and the operation signal transfer. What is the difference?

A1: If two kinds of sensors are used for the control panel as operating conditions,

- You can select between OR mode and AND mode.
- With the OR mode selected, if either sensor detects, detection and operation will occur almost simultaneously. However, with the AND mode selected, if both sensors do not detect, operation will not occur, and if either sensor only detects, the detection signal transfer will be only outputted. By setting to the AND mode and using a high sensitivity sensor and a standard sensor, the detection signal transfer can also be used as a caution alarm.

Q2: Let me know the precautions for changing from HALOSTAR (halon) to ABLE (CO_2)?

A2: In terms of the agent performance, change from halon 1301 to CO_2 is enabled by tripling the amount of agent, provided that the target can be regarded as a closed space. However, there are many considerations including the difference in burning material, the structural difference such as opening ratio, and the method of pipe connection based on the difference in pressure. Since check or experiment may be required, please refer to our company.

Q3: I want to attach ten sensors or so in ABLE. Is it possible?

A3: It is possible to connect exclusive thermistor sensors and sensors (for automatic fire alarm systems, contact type) to the control panel. Normally, two thermistor sensors are connectable. By adding the signal converter (TTA-2), a total of four thermistor sensors can be connected. Since the sensory circuit of the sensor connecting terminals (L1, C1) has the same circuit configuration as the receiver for automatic fire alarm systems, fixed temperature, differential, and smoke detectors for automatic fire alarm systems are connectable in ten or more pieces. (Smoke detectors are connectable in up to 20 pieces)

Q4: What is the detection speed of the temperature sensor for ABLE?

A4: Although the response speed of the temperature sensor is expressed with a " thermal time constant", it depends on the heat capacity, thermal conductivity, etc. of the medium (gas, liquid, etc.), it is necessary to determine the conditions.

- In the case of water (hot water), if a 20°C sensor is soaked in hot water of 90°C or higher, the sensor will be approx. 60°C after some 10 seconds.
- In the case of air (warm air), if a 20°C sensor is put in warm air of 100°C and with wind velocity of 1m, the sensor will be 60°C after about 40 seconds.

(If the sensor touches flame, it will be between 20°C and 60°C in 2 or 3 seconds.)

Q5: I want to set a timer for about 20 seconds between sensor operation and agent discharge. Is it possible?

A5: Although it is not possible in the general-purpose type, the high performance type can set its timer to 0 to 99 seconds.

Q6: The amount of agent for AFF-6B type (ABLE) is 6L. Isn't there any type with more amount of agent?

A6: AFF (machine foam) has only 6L type. If the amount of agent runs short, two or three sets should be added and interlocked. By connecting the starting output of the 1st set (non-voltage A contact) to the sensor input of the 2nd set or to the remote starting (manual starting) input, the two sets are interlocked. Various connections and configurations including sensors (detectors) are possible. Please contact our company.

Q7: I want to change the setting temperature of the heat detector (thermistor) for ABLE to 150°C. Is it possible?

A7: For 120°C to 300°C, we offer custom signal converters for expansion (TTA-2).
Three types (100°C to 200°C, 160°C to 260°C, and 240°C to 300°C) are prepared. However, since these are not in the standard inventory, please refer to our company. In addition, it should be noted that the thermistor sensor which is used above 250°C must be of high temperature specification (special order).

Q8: ABLE includes high temperature specification (special order) for use above 120°C. How should the temperature setting be done?

A8: Connect the dummy resistance equivalent to the thermistor resistance in the operating temperature to the sensor connection terminal, and adjust and set the setting volume. In this way, the setting can be done with a range of ±5%, but for more precise setting, please heat a high boiling point liquid such as silicone oil and measure it with a thermometer for adjustment and setting.

Q9: How is the amount of gas for ABLE (ACO type) determined?

A9: In the whole area discharge method, the calculation is based on the volume of the protected space, the area of the opening, the type of burning material (dangerous substance), the existence or nonexistence of an automatic closing device, etc.

Minimum required amount of gas (W) = W1+W2

W1 = V1 + K1 + K2

W2 = A + K3

V1: Volume of protected space [m^3]

K1: Amount of agent per unit volume (it depends on V1)

K2: Coefficient based on the type of burning material (dangerous substance)

A: Area of the opening [m^2]

K3: Coefficient which depends on the type of burning material if there is no automatic closing device

(For K1, K2, and K3, see Article 19 of the Fire Service Law enforcement regulations)

For local discharge, there are also calculation formulas.

In any case, please calculate with reference to Article 19 of the Fire Service Law enforcement regulations.

Design examples are shown in Chapter 4 “Design Standards”(P72-74) for reference.

Q10: I want to use two heat detectors (thermistors) for ABLE in order to obtain AND operation. Is it possible?

A10: Please use the high performance type. (It is not possible in the general-purpose type) Connect one detector to TH1-TC1 (or TH2-TC2) and another to TTA-2. The operation of one detector causes detection signal transfer and the operation of both detectors causes system start. Moreover, by making a difference (high and low) between the two setting temperatures, the detection signal transfer can also be treated as prealarm.

Q11: What is the largest electric wire size connectable to the terminal block of ABLE and ESPIO?

A11: ESPIO --- AC input terminal 1.6_ (2.5mm^2)
Other terminal 1.5mm^2 (AWG16)
ABLE --- All 2.5mm^2 (AWG14)
* Please use twisted wire except for power supply line.

Q12: ABLE has disconnection monitoring and alarm function for sensor wiring. Is it possible to output the signal transfer?

A12: It is possible for both high performance and general-purpose types. Because of non-voltage contact (DC30V and 1.0A), be careful of electric capacity. When controlling the damper, the exhaust fan or other external devices, please contact our company.

Q13: I want to use ABLE at an operating temperature of 300°C or higher, or in an environment with a sensor ambient temperature of -10°C or lower.

A13: Please connect a thermocouple type temperature controller (with lower limit burnout: CHINO DB1110-000 etc.) to L1-C-TD, and use a K type thermocouple instead of a sensor.

YAMATO

YAMATO PROTEC CORPORATION

Building Disaster Prevention Facilities
Plant Disaster Prevention Facilities
Evacuation Alarming Facilities
Various Extinguishers

Tokyo
Head Office 5-17-2 Shirokanedai, Minato-ku, Tokyo 108-0071, JAPAN
Ph: +81-3-3446-7151; fax: +81-3-3446-7160

Osaka
Head Office 2-1-10 Fukae-kita, Higashinari-ku, Osaka 537-0001, JAPAN
Ph: +81-6-6976-0701; fax: +81-6-6976-0802

Nagoya
Branch KT-AOI Buil 3F,1-1-22 Aoi, Higashi-ku, Nagoya-shi, Aichi 461-0004, JAPAN
Ph: +81-52-856-0701; fax: +81-52-856-0699

Sapporo
Branch 19-1-1 Kita 27-jo Higashi, Higashi-ku, Sapporo 065-0027, JAPAN
Ph: +81-11-780-1700; fax: +81-11-780-1701

Sendai
Branch 6-1 Rokuchonome-Nakamachi, Wakabayashi-ku, Sendai-shi,
Miyagi 984-0012, JAPAN
Ph: +81-22-287-9531; fax: +81-22-287-9534

Saitama
Branch 1-68 Miyahara-cho, kita-ku, Saitama-shi, Saitama 331-0812, JAPAN
Ph: +81-48-652-1345; fax: +81-48-652-1321

Yokohama
Branch 426-1 Imajyukunishi-chou, Asahi-ku, Yokohama-shi, Kanagawa 241-0031
Ph: +81-45-954-4411; fax: +81-45-954-4422

Shizuoka
Branch 231-1 Ikeda, Suruga-ku, Shizuoka-shi, Shizuoka 422-8005
Ph: +81-54-263-0119; fax: +81-54-262-7741

Hiroshima
Branch 7-4 Mitaki-machi, Nishi-ku, Hiroshima-shi, Hiroshima 733-0005, JAPAN
Ph: +81-82-237-4625; fax: +81-82-239-3859

Onomichi
Branch 401-20 Takasu-chou, Onomichi-shi, Hiroshima 729-0141, JAPAN
Ph: +81-848-46-1181; fax: +81-848-46-3417

Shikoku
Branch 202 Ohashi-machi, Matsuyama-shi, Ehime 791-1126, JAPAN
Ph: +81-89-963-5850; fax: +81-89-963-5877

Fukuoka
Branch 5-7-12 Naka, Hakata-ku, Fukuoka-shi, Fukuoka 812-0893, JAPAN
Ph: +81-92-411-4224; fax: +81-92-411-4229

Kagoshima
Branch 2-13-26 Komatubara, Kagoshima-shi, Kagoshima 891-0114, JAPAN
Ph: +81-99-296-8300; fax: +81-99-296-8301

Osaka
Factory 2-2-38 Mokuzai-dori, Mihara-ku, Sakai-Shi, Osaka 587-0042, JAPAN
Ph: +81-72-361-5911; fax: +81-72-361-6370

Center for Research
and Development
& Tokyo Factory 1951 Nagasao-michimae, Kawachi-machi, Inashiki-gun,
Ibaraki 300-1312, JAPAN
Ph: +81-297-84-4451; fax: +81-297-84-4716

Kanto
Physical distribution
center 3-6-35 Okada, Atsugi-shi, Kanagawa 243-0021, JAPAN
Ph: +81-46-226-8162; fax: +81-44-228-7880

2015.09